PERFORMANCE ANALYSIS OF LINEAR AND NON-LINEAR PRECODING SCHEMES WITH LEAKAGE BASED PRECODING SCHEMES IN MULTI-USER MIMO SYSTEMS

Thesis submitted in partial fulfillment of the requirement for the degree of

MASTER OF TECHNOLOGY

in

Electronics and Communication Engineering

Under the Supervision of

DR. SUNIL VIDYA BHOOSHAN

DR. BHASKER GUPTA

By

ADITI AGNIHOTRI

Enrolment No. 132013

JAYPEE UNIVERSITY OF INFORMATION TECHNOLOGY

Jaypee University of Information Technology, Waknaghat, Solan-173234, H.P. – India

MAY-2015

"The Books are lovely dark and deep

But, I have promises to keep

An hour's to study before I sleep

An hour's to study before I sleep"

.... Aditi Agnihotri

DECLARATION

I, **ADITI AGNIHOTRI,** hereby declare that thesis entitled "PERFORMANCE ANALYSIS OF LINEAR AND NON-LINEAR PRECODING SCHEMES WITH LEAKAGE BASED PRECODING SCHEMES IN MULTI-USER MIMO SYSTEMS" has been carried out by me under the supervision of **Dr. S.V. Bhooshan and Dr. Bhasker Gupta** , Department of Electronics and Communication engineering, Jaypee University of Information Technology, Waknaghat, Solan-173234,H.P, India and has not been submitted for any degree or diploma to any other university. All assistance and help during the course of the investigation has been duly acknowledged.

Date: 29/05/2015

Place: JUIT,Waknaghat,Solan

Agnihotri

Aditi Agnihotri

CERTIFICATE

This is to certify that thesis entitled **"PERFORMANCE ANALYSIS OF LINEAR AND NON-LINEAR PRECODING SCHEMES WITH LEAKAGE BASED PRECODING SCHEMES IN MULTI-USER MIMO SYSTEMS"**, submitted by **ADITI AGNIHOTRI** in partial fulfillment for the award of degree of Master of Technology in Computer Science & Engineering to Jaypee University of Information Technology, Waknaghat, Solan has been carried out under my supervision.

This work has not been submitted partially or fully to any other University or Institute for the award of this or any other degree or diploma.

Date: 29/05/2015

Dr. Sunil Vidya Bhooshan

Professor and Head

Department of Electronics and Communication

JUIT,Waknaghat,Solan

ACKNOWLEDGEMENT

I would like to express my sincere thanks to **Dr. S.V.BHOOSHAN** and **Dr. BHASKER GUPTA** for their advice, support, guidance and encouragement during my M.Tech curriculum. Dr. Bhaker Gupta has been a constant source of motivation and extremely approachable throughout this work. This work would not see the light of finishing point without his continuous support and encouragement.

I take this opportunity to express deep sense of gratitude to **Prof.(Dr.) T.S.LAMBA** , Dean (A&R),JUIT, Waknaghat, Solan for his advice, support, counseling and encouragement from time to time.

I am grateful to **Dr. S.V.BHOOSHAN**, Professor and head, Department of ECE, JUIT, Waknaghat, Solan for providing various facilities and counseling.

I am thankful to all the faculty members of Department of ECE and staff for their kind co-operation throughout this work.

I would like to acknowledge my friends for their moral support and motivation, which drives me to give my best. Deepti, Anu, Aviral, Abhishek, Rita, Sandhya, Manu, Amit …the list is endless…thanks to one and all. My special gratitude to Deepti and Aviral for being with me in thick and thins of life, I find myself lucky to have friends like them in my life.

I thank the Shiv baba for giving me the strength and patience to work through all these years so that today I can stand proud with my head held high.

Finally, I would like to acknowledge the people who mean world to me, my family. I extend my respect to my parents, my paternal and maternal grandparents, brother Aditya and sister-in-law Shalini and all elders to me in the family. I don't imagine a life without their love and blessings. Thank you mom, dad for showing faith in me and giving me liberty to choose what I desired. I consider myself the luckiest in the world to have such a supportive family, standing by me with their love and support.

Date ___ /___ /_____

Aditi Agnihotri

Deptt. Of ECE

JUIT,Waknaghat

Table of Content

List of Figures

List of Tables

Abbreviations and Symbols

AOA	Angle of Arrival
AWGN	Additive White Gaussian Noise
BER	Bit Error Rate
BC	Broadcast Channel
BLAST	Bell Labs Layered Space - Time
BS	Base Station
CCI	Co-Channel Interference
CSI	Channel State Information
DFE	Decision Feedback Equalizer
DoF	Degree of Freedom
DPC	Dirty Paper Coding
DSP	Digital Signal Processing
FDD	Frequency Division Duplex
ISI	Inter Symbol Interference
MAC	Multiple Access Channel
MIMO	Multiple Input Multiple Output
MISO	Multiple Input Single Output
MMSE	Minimum Mean Square Error
MS	Mobile Station
MU-MIMO	Multi-User Multiple Input Multiple Output
NLOS	Non Line of Sight
PDF	Power Density Funtion
QAM	Quadrature Amplitude Modulation
QoS	Quality of Service
SC	Single Carrier
SDMA	Space Division Multiple Access
SIMO	Single Input Multiple Output
SINR	Signal to Interference plus Noise Ratio
SISO	Single Input Single Output
SLNR	Signal to leakage Plus Noise Ratio
SMUX	Spatial Multiplexing
SNR	Signal to Noise Ratio
SU-MIMO	Single- user Multiple Input Multiple Output
TDD	Time Division Duplex
THP	Tomilson Harashima Precoding
VP	Vector Perturbation
ZF	Zero Forcing

ABSTRACT

Multiple input multiple output (MIMO) system is one in every of the foremost promising wireless technologies which is able to deliver outspread coverage, outrageous throughput and better reliability**.** It employs multiple antennas at each transmitter and receiver sides so as to induce high spatial diversity gain that successively helps to mitigate fading and provides improved system reliability. MIMO systems conjointly high data transmission rate through spatial multiplexing therefore leads to higher system capacity.

Now days, the vital analysis topic is that the study of multi-user MIMO (MU-MIMO) systems. MU-MIMO system is a key technology for future wireless communication systems as a result of these systems satisfies most of the wants of future generations. Such systems have the potential to mix the high throughput accomplishable with MIMO process with the advantages of space division multiple access (SDMA). Joint process of MIMO channels yields maximum diversity regardless of the amount of multi-user interference.

In order mitigate Multi-user interference various techniques and schemes are proposed and one of them is the precoding scheme. That is, if the base station knows the channel, the interference can be suppressed before transmission through the processing at the base station side with the help of CSI. Precoding schemes are used for single user as well as multi user scenario.

In this thesis, we have discussed various precoding schemes namely linear and non-linear precoding along with the new concept of precoding technique that is leakage precoding scheme. In the leakage based precoding the leaked power from the transmitter to the other users at the receiver is taken into account to improve the performance of the system. The BER expressions are developed for the mentioned schemes and corresponding results are discussed thereafter to understand the performance of the precoding schemes between the SNR and BER.

Along with this analysis, the leakage based precoding is inculcated in the special channel of propagation that is X-channel. In this scenario we will analyze the amount of processing time for a given DoF for user and SNR values.

CHAPTER 1

INTRODUCTION

The next generation of wireless mobile communication systems requires the reliable transmission of high-rate data under various types of channels and scenarios. Current wireless mobile, data, and fixed access communication systems are converging into a data oriented wireless networks with high spectral efficiency. Future wireless communication systems should be flexible and adaptive to various scenarios and Quality-of-Service (QoS) requirements. The system should be robust to the influence of fading, interference, and hardware imperfections.

The very high data rate that is required for future wireless systems in reasonably large areas do not appear to be feasible with the conventional techniques and architectures. Frequency bands that are envisioned for future wireless communication systems are well above 2 GHz. The radio propagation in these bands is significantly more vulnerable to non-line-of sight (NLOS) conditions, which is typical in modern urban communications.

The efficient design of wireless systems will require the use of multiple antennas, advanced adaptive modulation and coding schemes, relaying nodes, cooperative networks and users, and cross-layer design. The goal of reaching high data rates is particularly challenging for systems that are power, bandwidth, and complexity limited. However, another domain can be exploited to significantly increase channel capacity: the use of multiple transmit and receive antennas

Pioneering work done in [1], [2], and [3], ignited much interest in this area by predicting remarkable spectral efficiencies for wireless systems with multiple antennas when the channel exhibits rich scattering and the channel state information (CSI) can be accurately tracked. This initial promise of exceptional spectral efficiency resulted in an explosion of research activities to characterize the theoretical and practical issues associated with MIMO channels and to extend these concepts to multi-user systems.

The main question from both a theoretical and practical standpoint is whether the enormous initially predicted capacity gains can be obtained in a more realistic operating scenarios and what specific gains result from adding more antennas and computational power to obtain CSI at the transmitter and receiver.

For single-user (SU) systems, a transmission and reception strategy that exploits this structure achieves capacity on approximately min (MT, MR) separate channels, where MT is the number of transmit antennas and MR is the number of receive antennas. Thus capacity scales linearly with min (MT, MR) relative to a system with one transmit and one receive antenna. The capacity increase requires a scattering environment such that the matrix of channel gains between each transmit and receive antenna pair has full rank and independent entries and that perfect estimates of these gains are available at the transmitter and receiver.

Space-time coding (STC) [4], [5], and spatial multiplexing (SMUX) [3], [6], provide full diversity and achieve high data rates over MIMO channels, respectively. Spatial multiplexing involves transmitting independent streams of data across multiple antennas to maximize throughput, whereas space-time coding maps input symbol streams across space and time for diversity and coding gain at a given data rate. Neither scheme requires CSI at the transmitter. However, to achieve the maximum information rate and/or the diversity and array gain afforded by increased computational complexity, appropriate precoding and modulation techniques are necessary.

Generalized designs of a jointly optimum linear precoder and decoder for a SU MIMO system, using a mean-squared error (MSE) criterion are presented in [7] and [8]. There are other precoders that exhibits the linear and non-linear capacity by employing multiple antenna at transmitter and receiver side. The precoders are broadly classified into two categories namely linear precoder and non-linear precoders.

An important research topic is the study of multi-user MIMO (MU-MIMO) systems. Such systems have the potential to combine the high capacity achievable with MIMO processing with the benefits of space division multiple access (SDMA). In the MU-MIMO scenario, a base station (BS) or an access point (AP) is equipped with multiple antennas and it is simultaneously communicating with a group of users. Each of these users is also equipped with multiple antennas. We focus on systems where the complex signal processing is performed at the BS/AP. The BS/AP will use the CSI available at the transmitter to allow these users to share the same channel and mitigate or completely eliminate multi-user interference (MUI) in an ideal case.

In an MU scenario, capacity becomes a K-dimensional region defining the set of all rate vectors ($R_1, \ldots, R_K$) simultaneously achievable by all K users. Two MU-MIMO scenarios can be distinguished. In the first scenario, multiple non-cooperative terminals are transmitting to a single receiver. This scenario is often referred to as the MU-MIMO uplink (UL) channel. In the information theory, it is known as the MIMO multiple access channel (MAC). The scenario, in which a single terminal is transmitting to multiple non co-operative receivers, is referred to as MU-MIMO downlink channel or broadcast channel (BC).

The capacity region of a general MIMO MAC was obtained in [2], [9]-[10]. It has been shown that a linear detection with successive interference cancellation (SIC) provides the maximum sum rate capacity of a MU-MAC system. However, the capacity of a MIMO BC is an open problem due to the lack of a general theory on non-degraded broadcast channels.

1.1 Objective of Thesis

In this thesis, a general framework is introduced in the context of MU-MIMO precoding matrices [14]. The main goal is to define MU-MIMO aalgorithm that will be able to address various optimization criteria like minimum bit error rate, maximum average signal to noise ratio, maximum information rate and processing time [15] [13]. It has been shown in the literature that the simulation results are based on MU-MIMO precoding algorithms that are DPC, channel inversion, regularized channel inversion, block diagonalization and vector perturbation considering all users are equipped with single receiver antenna

The connection between the user terminals and the base station in the wireless MU-MIMO scenario is the propagation channel for wireless.

In chapter 2, We have describe the MIMO channel model. An overview of Su-MIMO processing technique is given. We will review techniques that do not require any CSI [14] at the transmitter to extract spatial multiplexing gain of and diversity gain. These techniques do not require CSI at the transmitter to encode the user's data. A short overview of different MIMO gains like array gain, spatial multiplexing gain, diversity gain etc is given in this chapter. The channel model construction is done through physical scattering occur by a signal.MIMO capacity is also discussed which is based on the Shannon capacity theorem of communication [15]. And a brief introduction tovarious detector used in the MIMO is also mentioned.

In Chapter 3, the basic overview of fundamentals of multi-user MIMO channel is discussed. A brief introduction about the capacity limit of MAC [15] and BC channels is mentioned followed by this a general concept of BER is also discussed Some pros and cons of MU-MIMO system are also highlighted in this chapter.

In Chapter 4, in order to deal with the co-channel interference [14], there are many techniques which are surveyed in the literature among them is the precoding techniques which is nothing but a pre-processing of a signal with a knowledge of channel at the transmitter side. There are mainly linear and non-linear precoding techniques which are mentioned in this chapter and brief understanding about them is established.

In chapter 5, here the concept of leakage based precoding is introduced where the leaked power is also a main concern while dealing with the interference among the multi-user system. The system model of leakage based precoding technique and the beamforming designing is mentioned in this chapter. The special type of channel call X-channel which exhibits some unique properties and its system model is also introduced. Here, we have tried to inculcate leakage precoding onto the X-channel such that its processing time elapse is analyzed with other precoding techniques. Thereafter, some conclusions are drawn from the observations.

In chapter 6, BER expressions are drawn for linear and non-linear precoding techniques along with the leakage based precoding technique. Based on the developed expressions, simulation results are drawn for different antenna configurations.

In chapter 7, Finally conclusions are drawn and also portrays the future scope of this work done.

CHAPTER 2

INTRODUCTION TO MIMO SYSTEM MODEL

For any communication system the ultimate goal is to provide the seamless services at the minimum cost induced, prime quality of services, high data rate with the least demand of bandwidth spectrum. Therefore, the necessity of extremely robust system and also the power requirement needed to be designed so as to fulfill the constraints of the wireless transmission scheme that are specifically multipath fading, interference and spectrum of bandwidth. In order to fulfill these challenges many researches has been done and still occurring. To trot out this one amongst the rising system multiple input multiple output (MIMO) systems has been evolved. MIMO systems are having multiple antennas both at the receivers and transmitter side. In order to achieve spatial diversity for combating the effect of fading, a stack of antenna array is put over at the receiver so that the spatial diversity is achieved.

There are various types of configurations for the number of antennas at the transmitter and receiver side. There are classified into SISO, MISO, SIMO and MIMO. The MIMO is the advancement among the classification as it not only exploits the time and frequency dimensions but also the spatial dimensions are exploited.

2.1 Building Blocks of MIMO communication System

The essential building blocks that comprise a MIMO communication system is shown in figure 1.1.The information bits to be transmitted are encoded (using, for example, a convolutional encoder) and interleaved. The interleaved codeword is mapped to data symbols (such as quadrature amplitude modulation) by the symbol mapper. These data symbols are input to a space–time encoder that outputs one or more spatial data streams. The spatial data streams are mapped to the transmit antennas by the space–time precoding block.

The signals launched from the transmit antennas propagate through the channel and arrive at the receive antenna array. The receiver collects the signals at the output of each receive antenna element and reverses the transmitter operations in order to decode the data receive space–time processing, followed by space–time decoding, symbol de-mapping, de-interleaving and decoding. Each of the building blocks offers the opportunity for significant design challenges and complexity – performance trade - offs. Furthermore, a number of variations can exist in the relative placement of the blocks, the functionality and the interactions between the blocks.

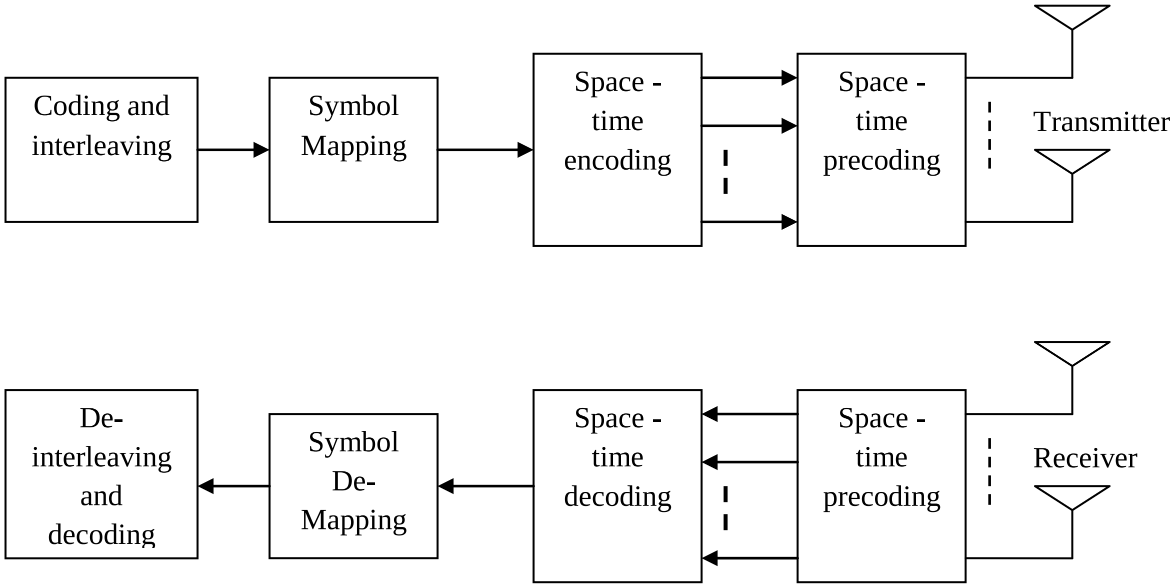

Fig 2.1 Building blocks of MIMO communication system

2.2 Benefits/ Advantages of MIMO system

2.2.1 Array gain

Array gain is the increase in SNR at the recipients that outcomes from coherent combining effect of the wireless signals at transmitter or destination or at both. In MISO, we can have transmitter exhibits array gain if the channel is known to the various antennas at the transmitter. Depending on the channel coefficients, the transmitter acclimatizes the weights for coherent combining at the receiver with single antenna. While In the situation of SIMO, we can have receiver array gain if the channel is known to the multiple antennas at the receiver and is unknown to the transmitter antenna. The receiver adjusts the weights of approaching signals for coherent combining at the output and subsequently SNR at the receiver is increased which results in improve in range and coverage of a wireless network.

2.2.2 Spatial multiplexing gain

Spatial multiplexing means transmission of different autonomous data streams within the functioning bandwidth. In $M_R \times M_T$ MIMO channel, data stream is apportion into M_R data streams, modulated and transmitted simultaneously from M_T transmit antennas. At the receiver, these data streams are consolidated to recuperate the native data stream. Therefore, information rate of the framework increments. Spatial multiplexing gain is given by min $\{ M_T, M_R \}$.

Space-time diversity methods assume that the receiver has perfect channel knowledge and the transmitter has no channel knowledge. They are intended to perform well over averaged channel statistics, to provide diversity gain. Diversity gain reduces fading effect, BER and improves the nature of signal. In this manner, diversity gain provides reliable communication.

2.2.3 Spatial diversity gain

Spatial diversity gain is acknowledged by giving the receiver with numerous duplicates of the transmitted signals in space, time or frequency. With an extending number of independent copies (the quantity of copies is frequently accrued as the diversity order), the probability that at least one of the copies is not encountering a profound fade increases, in this way enhancing the quality and reliability of reception. A MIMO channel with M_T transmit antennas and M_R receive antennas potentially offers $M_R M_T$ independently fading links, and henceforth a spatial diversity order of $M_R M_T$.

Space-time diversity methods assume that the receiver has impeccable channel knowledge and the transmitter has no channel knowledge. They are intended to perform well over arrived at averaged channel statistics, to provide diversity gain. Diversity gain diminishes fading effect, BER and enhances the quality of signal. Therefore, diversity gain provides reliable communication.

2.2.4 Interference mitigation

Co-channel interference adds to the overall noise of the system and deteriorates performance. Interference reduction allows use of aggressive reuse factors and improves the system capacity. Interference in wireless networks results from multiple users sharing time and frequency resources. Interference may be mitigated in MIMO systems by exploiting the spatial dimension to increase the separation between users. For instance, in the presence of interference, array gain increases the tolerance to noise as well as the interference power, hence improving the SINR. Additionally, the spatial dimension may be leveraged for the purposes of interference avoidance, i.e., directing signal energy towards the intended user and minimizing interference to other users. Interference reduction and avoidance improve the coverage and range of a wireless network.

In general, it may not be possible to exploit simultaneously all the benefits described above due to conflicting demands on the spatial degrees of freedom. However, using some combination of the benefits across a wireless network will result in improved capacity, coverage and reliability. Interference reduction can also be implemented at the transmitted side, where the goal is to enhance the signal power at the intended receiver and minimize the interference energy sent towards co-channel users.

MIMO systems add the diversity so the robustness of the system improves. MIMO systems also provide high data rate and high spectral efficiency. To achieve high data rate with low BER, there is a trade-off between data rate and BER.

Drawbacks of MIMO systems are that these systems are very costly and complex because it requires large number of antenna array and powerful DSP unit. Thus, signal processing also becomes very complex.

2.3 MIMO Channel and Signal Model

In order to design efficient communication algorithms for MIMO systems and to understand the performance limits, it is important to understand the nature of the MIMO channel. When considering generalized channel model of MIMO having M_T

antennas at transmitter side and M_R antennas at the receiver side. The MIMO system model equation is given by (2.1)

$$y = Hx + n \qquad (2.1)$$

here the y is the output vector at receiver having dimension $M_R \times 1$, x is the transmit data vector with the dimension of $M_T \times 1$,n is the spatially and temporally additive white Gaussian noise (AWGN) having a dimension of $M_R \times 1$. H is the channel matrix having an order of $M_R \times M_T$ .The channel response H is represented as $h_{i,j}(\tau, t)$. this is depicted as the response at time t to an impulse applied at time $(t - \tau)$. The composite channel response is given by the $M_R \times M_T$ matrix $H(\tau, t)$ with

$$H(\tau,t) = \begin{bmatrix} H_{1,1}(\tau,t) & H_{1,2}(\tau,t) & \cdots & H_{1,M_T}(\tau,t) \\ H_{2,1}(\tau,t) & H_{2,2}(\tau,t) & & H_{2,M_T}(\tau,t) \\ \vdots & & \ddots & \vdots \\ H_{M_R,1}(\tau,t) & H_{M_R,2}(\tau,t) & \cdots & H_{M_R,M_T}(\tau,t) \end{bmatrix} \qquad (2.2)$$

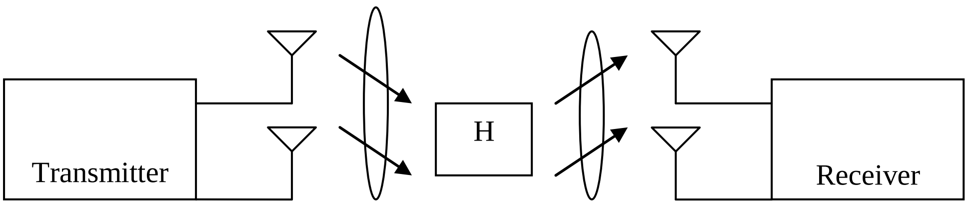

Figure 2.2 Block diagram of MIMO System model

The vector $\left[h_{1,j}(\tau,t)\ h_{2,j}(\tau,t) \ldots h_{M_R,j}(\tau,t)^T\right]$ is referred to as the spatio-temporal signature induced by the jth transmit antenna across the receive antenna array. Furthermore, given that the signal $x_j(t)$ is launched from the jth transmit antenna, the signal received at the ith receive antenna is given by

$$f_i(t) = \sum_{j=1}^{M_T} h_{i,j}(\tau,t) * x_j(t) + n_i(t)\ , \ i = 1,2,\ldots, M_R \qquad (2.3)$$

where $n_i(t)$ is the additive noise in the receiver.

2.3.1 Single User MIMO system model

In case of single-user MIMO (SU-MIMO) all the received data is available for processing while in the case of MU-MIMO, received data is distributed among different users. If each user has only one receive antenna then user is restricted to access only one element of the received data Y. SU-MIMO system as shown in Fig. 2.3.

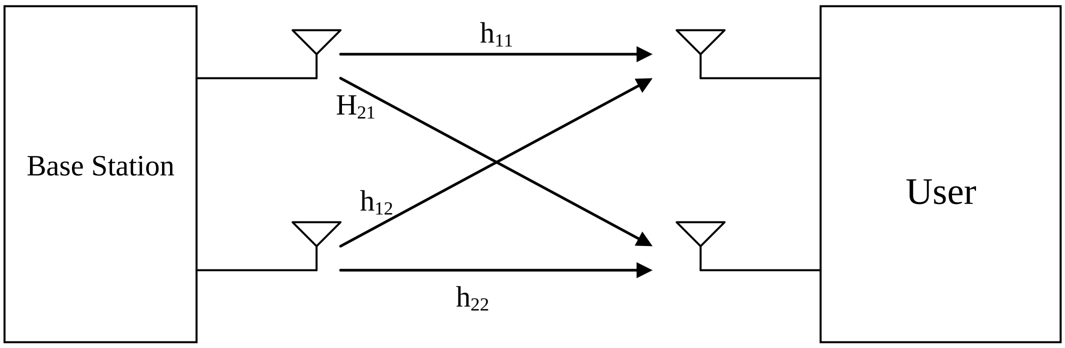

Fig 2.3 System Model of Single User MIMO

2.3.2 Construction of MIMO channel through Physical Scattering Model

We derive a MIMO wireless channel model from a simplistic physical scattering description. For convenience, we suppress the time-varying nature of the channel and use the narrowband array assumption described in brief below. Consider a signal wavefront $\omega(t)$ impinging at an angle θ on an antenna array comprises of two antennas spaced d apart in fig. 2.4 .The impinging wavefront has bandwidth is B and is represented as

$$\omega(t) = \beta(t)e^{jv_c t} \tag{2.4}$$

where $\beta(t)$ is the complex envelope of the signal having the bandwidth B and v_c is the carrier frequency in radians.

Under the narrowband assumption, we take the bandwidth B to be much smaller than the reciprocal of the transit time T_ω of the wavefront across the antenna array, i.e., B<< $1/T_\omega$.The signal received at the first antenna is given by $y_1(t)$, the signal received by the second antenna is given by

$$y_2(t) = y_1(t)e^{-j2\pi \sin(\theta)(d/\lambda_\omega)} \tag{2.5}$$

Where the λ_ω is the wavelength of the signal wavefront . it is clear from (2.5) that the signal received at the two antennas are identical, except for the phae shift that depends on the array geometry and the AOA of the wavefront. This result can be extended to arrays having more than two antennas in a straightforward way.

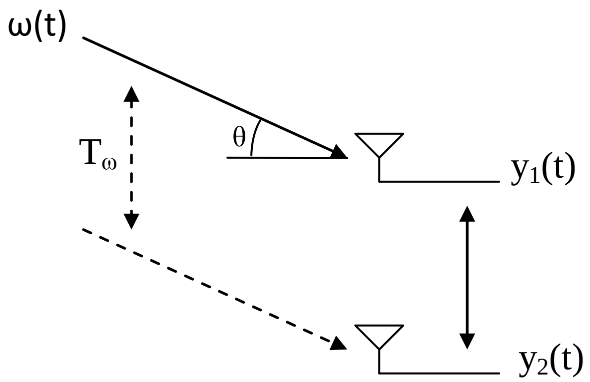

Fig 2.4 Schematic of wavefront impinging on an antenna array.

We shall next make use of the narrowband assumption in constructing the MIMO channel below. For the sake of simplicity we assume a single bounce based scattering model and consider a scatterer located at angle θ and delay τ w.r.t the receive array with a complex amplitude S(θ,τ) in fig. 2.5.

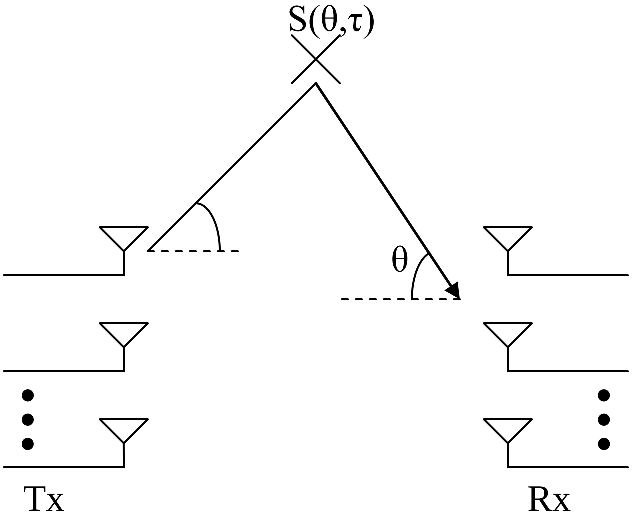

F*ig 2.5* Construction of the MIMO channel model from a physical scattering description.

The same scatterer will appear at Φ with respect to transmit antenna array. Thus, given the overall geometries of transmit and receive arrays, any two of the variables Φ , θ ,τ defines the third one. $M_R \times M_T$ MIMO channel can be constructed as

$$\mathrm{H}(\tau) = \int_{-\pi}^{\pi}\int_{0}^{\tau_{\max}} \mathrm{S}(\theta,\tau')\mathrm{a}(\theta)\mathrm{b}^{\mathrm{T}}(\emptyset)\mathrm{g}(\tau-\tau')\mathrm{d}\tau'\mathrm{d}\theta \tag{2.6}$$

Here the $\tau_{\max}$ is the maximum delay spread in the channel. g(τ) is the combined response of pulse shaping at the transmitter and matched-filtering at the receiver, and the a(θ) and b(Φ) are the $M_R \times 1$ and $M_T \times 1$ array response vectors at the receiver and transmitter, respectively. However, (2.5) possess number of limitations and cannot adequately model all observed channel effects.

A more general model is to assume multiple bounces, i.e., energy from the transmitter uses more than one scatterer to reach the receiver. If we use a double (or multiple) scattering model, the parameters θ,Φ, and τ in (2.6) become independent.

2.4 MIMO Channel Capacity

The Shannon capacity of a communication channel [15] is the maximum asymptotically (in the block-length) error-free transmission rate supported by the channel. If the transmitted and received data is random in nature then the channel capacity refers to maximum mutual information between them which can be mathematically expressed as

$$\bar{C} = \max\ I(X;Y) \tag{2.7}$$

Shannon derived normalized capacity for band limited white Gaussian channel. Normalized capacity means capacity per unit bandwidth and is given as

$$\bar{C} = \log_2(1+\bar{\gamma}) \tag{2.8}$$

2.4.1 Capacity of a deterministic MIMO Channel

The input–output relation over a symbol period assuming single-carrier (SC) modulation is given by

$$y = \sqrt{\frac{E_x}{M_T}}Hx + n \tag{2.9}$$

here x is $M_T \times 1$ the transmit signal vector with E{x}=0 , n is the additive temporally white complex Gaussian noise with $E\{nn^H\} = N_0 I_{M_R}$ and the E_x is the total average energy available at the transmitter over a symbol period. We constrain the total average transmitted power over a symbol period by assuming that the covariance matrix of x, $R_{xx} = E\{xx^H\}$, satisfies $Tr(R_{xx}) = M_T$.

We assume that the channel H is perfectly known to the receiver (channel knowledge at the receiver can be maintained via training and tracking). Although H is random, we shall first study the capacity of a sample realization of the channel, i.e., we consider H to be deterministic. The information for x having the covariance matrix Rxx is given by

$$I = \log_2 \det\left(I_{M_R} + \frac{E_x}{M_T N_0} H R_{xx} H^H\right) \qquad \text{b/s/Hz} \tag{2.10}$$

and the capacity of MIMO channel as follows

$$C = \max_{R_{xx}} \log_2 \det(I_{M_R} + \frac{E_x}{M_T N_0} H R_{xx} H^H) \quad \text{b/s/Hz} \tag{2.11}$$

where the maximization is performed over all possible input covariance matrices satisfying $Tr(R_{xx}) = M_T$. Furthermore, given a bandwidth of B Hz, the maximum asymptotically (in the block-length) error-free data rate supported by the MIMO channel is simply WC b/s.

In the absence of channel state information at the transmitter, it is reasonable to choose x to be spatially white, i.e.,$R_{xx} = I_{M_T}$. This implies that the signals transmitted from the individual antennas are independent and equi-powered. The mutual information achieved with this covariance matrix is given by

$$I_{CU} = \log_2 \det(I_{M_R} + \frac{E_x}{M_T N_0} H H^H) \tag{2.12}$$

$$I_{CU} = \sum_{i=1}^{r} \log_2(1 + \frac{E_x}{M_T N_0} \lambda_i) \tag{2.13}$$

Where r is the rank of H and λ_i (i= 1,2,…,r) denotes the eigen values of HH^H. Clearly, $I_{CU} \leq C$.

2.4.2 Capacity of Fading MIMO Channels

We shall see below that in a fading channel there are essentially two notions of capacity—ergodic capacity and outage capacity [11], [15], which relate to the mean and tail behavior of I_{CU}, respectively.

Ergodic Capacity: If the transmitted codewords span an infinite number of independently fading blocks, the Shannon capacity also known as ergodic capacity is achieved by choosing x to be circularly symmetric complex Gaussian with $R_{xx} = I_{M_T}$ resulting in

$$C = E(I_{CU}) \tag{2.14}$$

where the expectation is with respect to the random channel.

$$\mathrm{C} = \min(\mathrm{M_R}, \mathrm{M_T}) \log_2 \rho + \mathrm{O}(1) \tag{2.15}$$

which clearly shows the linear increase in capacity in the minimum of the number of transmit and receive antennas and as expected, the ergodic capacity increases with increasing ρ and also with M_T and M_R.

Outage Capacity: In applications where delay is an issue and the transmitted codewords span a single block only, the Shannon capacity is zero. This is due to the fact that no matter how small the rate at which we wish to communicate, there is always a nonzero probability that the given channel realization will not support this rate. We define the q% outage capacity $C_{out,q}$ as the information rate that is guaranteed for (100-q)% of the channel realizations [20] i.e.,

$$P\left(I_{CU} \leq C_{out\,,q}\right) = q\% \tag{2.16}$$

Now, The outage probability for a given transmission rate is the probability that the mutual information falls below that rate R, i.e., $\mathrm{P_{out}}\,(\mathrm{R}) = \mathrm{P}(\mathrm{I_{CU}} \leq \mathrm{R})$, and can be interpreted as the packet error rate (PER). This interpretation will lead to an interesting tradeoff between transmission rate and outage probability.

2.5 Linear Detection Schemes for MIMO System

At the receiver, we get the superposition of transmitted signals. Linear detectors are used at the receiver to recover the desired signal from multiple transmitted signals.

2.5.1 Zero-Forcing (ZF) detector

In ZF detector [16], the signal from each transmit antenna is considered as the desired signal and other signals are considered as interferers. The amplitude of interferers are set to zero by inverting the channel response. When the channel matrix of the MIMO system is a square matrix (i.e. the number of rows of the matrix equals to number of column of the matrix) and non-singular then inverse of the channel matrix is taken to recover the desired signal.

$$\hat{X} = H^{-1}Y \tag{2.17}$$

Where $\hat{X}$ is the detected signal . When the channel matrix is not a square matrix (i.e., the number of rows of the matrix is greater than or less than the number of column of the matrix), then matrix inverse cannot be calculated. In this case pseudo inverse of the channel matrix is calculated and thus we get the desired signal as

$$\hat{X} = (H^H H)^{-1} H^H Y \tag{2.18}$$

ZF focuses on cancelling interference at the expense of noise enhancement. This problem can be solved by using MMSE.

2.5.2 Minimum mean square error (MMSE) detector

MMSE detector [16] is designed to suppress noise enhancement and at the same time remove interference.

$$\hat{C} = (H^H H + \sigma_n^2 I) H^H y \tag{2.19}$$

where I is the identity matrix. It provides better bit error rate than ZF detector, however the performance of MMSE approaches the performance of ZF as SNR tends to infinity.

CHAPTER 3

MULTI -USER MIMO CHANNEL

MIMO technique is an essential means of increasing capacity in the high SNR regime, providing at most M_{min} spatial degrees of freedom. In the single-user MIMO system, a point-to-point high data rate transmission can be supported by spatial multiplexing while providing spatial diversity gain. However, most communication systems deal with multiple users who are sharing the same radio resources.

In this multi-user communication system, multiple antennas allow the independent users to transmit their own data stream in the uplink (many-tone) at the same time or the base station to transmit the multiple user data streams to be decoded by each user in the downlink (one-to-many). This is attributed to the increase in degrees of freedom with multiple antennas as in the single-user MIMO system.

3.1 System Model of Multi- User MIMO System

In uplink multi user MIMO system scenario, users transmit signals to the base station over the same channel but it is difficult for the base station to separate these signals. If transmitter provides channel feedback information back to the users then

Co-ordination among users may be possible. For this coordination each user must know channels experienced by other users as well as its own channel. In uplink, base station receives the data from multiple users. It is also known as uplink- MAC (multiple access channel) and it is a multipoint to point communication.

In the downlink, base station transmits information simultaneously to a group of users. But there is some inter-user interference because signal received by one user will act as interference signal for other remaining users. It is also known as downlink-BC (broadcast). It is a point to multipoint communication.

3.1.1 Up-Link Multi User MIMO System : Multiple Access Channel

In MU- MIMO [PG], assume the number of independent users be *K*, number of antennas at the mobile station to be M_M and the number of antennas at the base station to be M_B. We have two channels here uplink and downlink. Uplink channel is known as multiple access channel (MAC) and downlink channel is known as broadcast channel (BC) [PG].

First we will consider the multiple access channels as shown in Fig. 3.1.

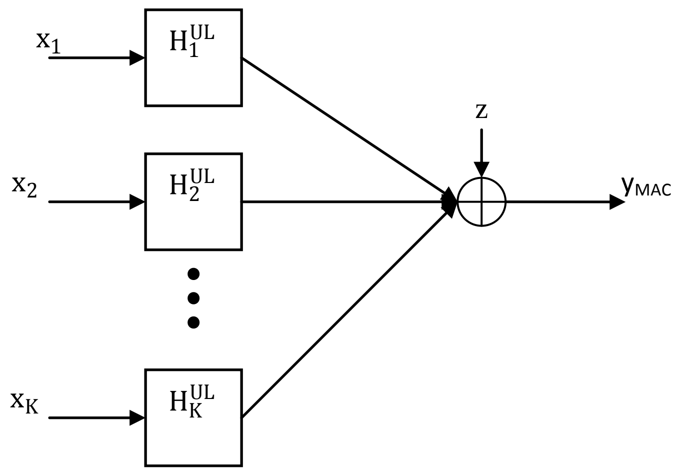

(Fig 3.1 Uplink channel model for multi-user MIMO system: multiple access channel (MAC).

If there are K-users in MU-MIMO system .We assumes that the BS is equipped with M_B antennas and MS contains M_M antennas. The channel gain between uth user MS and BS is represented as H_u^{UL}. n is the Gaussian noise in order of $N_B \times 1$ The received signal is expressed as,

$$y_{MAC} = H_1^{UL}x_1 + H_2^{UL}x_2 + \cdots + H_K^{UL}x_K + n \qquad (3.1)$$

$$= [H_1^{UL} \quad H_2^{UL} \quad \ldots \quad H_K^{UL}] \begin{bmatrix} x_1 \\ \vdots \\ x_K \end{bmatrix} + n \qquad (3.2)$$

$$= H^{UL} \begin{bmatrix} x_1 \\ \vdots \\ x_K \end{bmatrix} + n \qquad (3.2)$$

3.1.2 Down-Link Multi User MIMO System: Broadcast Channel

In the case of downlink channel [17], where it is also known as broadcast channel (BC) is shown in fig. 3.2.The channel gain between BS and uth user is represented as H_u^{DL}. The receiver signal at uth user is given by,

$$y_u = H_u^{DL} x + n_u \qquad \text{where } u=1,2,\ldots,K \tag{3.3}$$

Representing all the user signals by a single vector, the overall system can be represented as

$$\begin{bmatrix} y_1 \\ y_2 \\ \vdots \\ y_K \end{bmatrix} = \begin{bmatrix} H_1^{DL} \\ H_2^{DL} \\ \vdots \\ H_K^{DL} \end{bmatrix} x + \begin{bmatrix} n_1 \\ n_2 \\ \vdots \\ n_K \end{bmatrix} \tag{3.4}$$

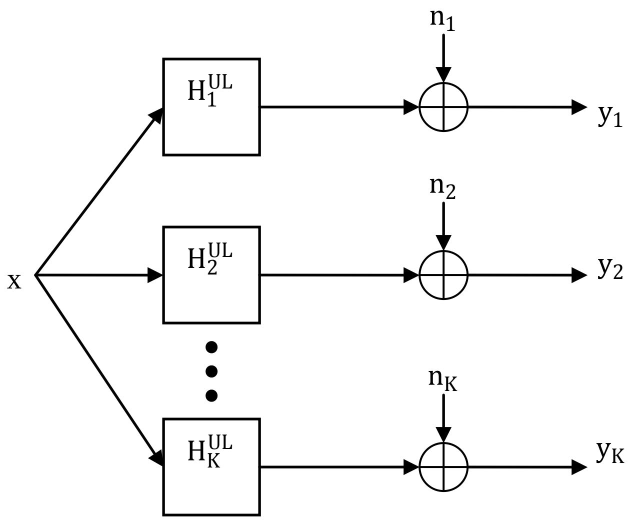

Fig 3.2 Downlink channel model for multi-user MIMO system: broadcast channel (BC)

3.2 Channel Capacity of MU-MIMO Systems

Based on the Mathematical model of MU- MIMO system, channel capacity of MAC and BC is discussed in AWGN channel [16]. First the capacity of MAC is discussed. Let P_u denote the power of the uth user in the MU-MIMO system with K users and R_u

denote the data rate of the uth user in the MU-MIMO system with K users [15-17]. Capacity region of MAC with K = 2 and M_R=1 is shown in Fig. 3.3.

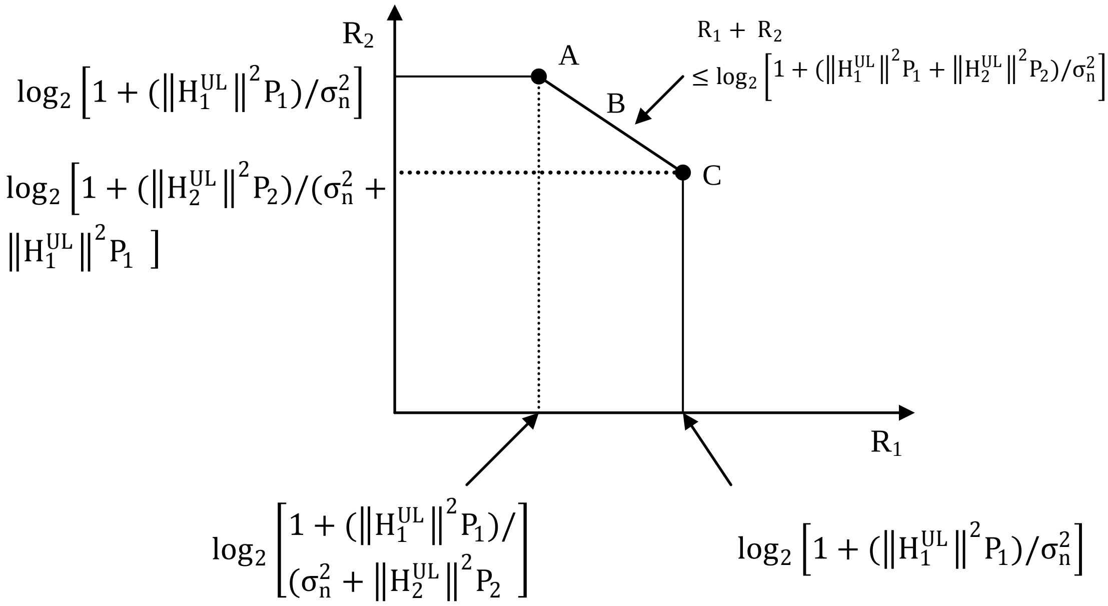

Fig3.3 Capacity region of MAC with U = 2 and M_R=1

The capacity region is expressed as

$$R_1 \le \log_2\left[1 + \|H_1^{UL}\|^2 P_1\right] \quad (3.5)$$

$$R_2 \le \log_2\left[1 + \|H_2^{UL}\|^2 P_2\right] \quad (3.6)$$

$$R_1 + R_2 \le \log_2\left[1 + \|H_1^{UL}\|^2 P_1 + \|H_2^{UL}\|^2 P_2\right] \quad (3.7)$$

Therefore, the received signal is expressed as

$$Y_{MAC} = H_1^{UL} x_1 + H_2^{UL} x_2 + \begin{bmatrix} n_1 \\ n_2 \end{bmatrix} \quad (3.8)$$

Here x_u is the transmitted signal where u=1,2 . In order to achieve the point A in Fig. 3.3, we assume that x_1 interferes with the signal from user 2 and we detect x_1. Once x_1 is detected correctly, it can be cancelled from the received signal.

3.3 BER performance of the System

BER is the ratio of number of bits in error to the total number of bits [18]. BER performance can be analyzed by analyzing BER at a given signal to noise ratio (SNR). The errors are received bits that have different values than the transmitted bits. SNR is a measure, that compare desired signal level with the noise level and it is given as

$$\mathrm{SNR} = 10\log\frac{E_S}{N_0} \tag{3.9}$$

where E_s is the energy of signal. The SNR is inversely proportional to the noise power N_0. Thus, Higher the SNR implies that the noise is low. On increasing the SNR, bit error rate will decrease so the performance of a system will increase.

CHAPTER-4

PRECODING TECHNIQUES IN MIMO SYSTEM

With the aim of reducing the receiver complexity and due to the lack of co-operation between users, the signal processing complexity is transferred to the BS by means of a processing stage called precoding. If the base station knows the channel, the interference can be suppressed before transmission. Combining the precoding phase and the linear filtering at the relay, each user will receive an optimized interference-free signal.

There are various precoding techniques like linear and non-linear.In this section, the multiuser MIMO precoding algorithms are introduced for the case of linear and non-linear and classified briefly.

4.1 Linear Precoding

In MU-MIMO systems, increasing more number of users will results in inter-user interference. Mitigating inter-user interference in MU-MIMO is a major area of concern. In this chapter, different precoding techniques are discussed and their capability of mitigating such interferences is evaluated. Precoding is mainly used to separate signals of different users transmitted through multiple antennas.

The broad classification of precoding techniques like linear and non-linear . Out of this, linear precoding techniques have simpler architecture. It includes techniques like channel inversion, regularized channel inversion, block diagonalization etc shown in Fig. 4.1 . In these techniques it is assumed that the transmitter has perfect channel state information.

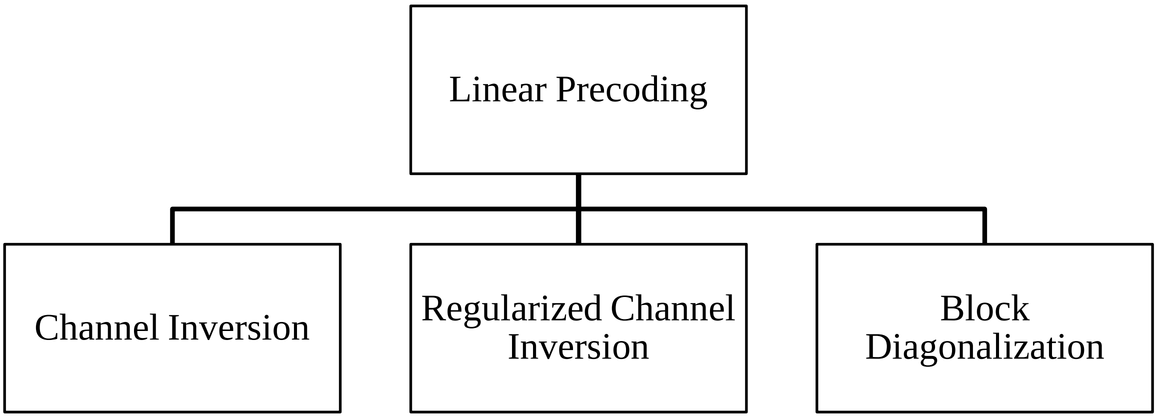

Fig. 4.1 Types of Linear Precoding Schemes

4.1.1 Linear Precoding for Single User Antennas Systems

The first class of multi-user transmission approaches we consider is based on linear processing, which assumes that the transmitted signal x in Eq. 2.1 is generated by a linear combination of data symbols contained in a vector d. If we do not use any other time domain coding such as those discussed in the next section, d can have any dimension up to the rank of the channel matrix. In this section we discuss various approaches to the problem of designing x given d.

(i) Channel Inversion

A simple way of dealing with inter-user interference is by imposing the constraint that all interference terms be zero. Assuming that, $M_R \leq M_T$, this can be accomplished at the transmitter by precoding d with the pseudo-inverse of the channel matrix

$$x = H^{\dagger}d = H^{*}(HH^{*})^{-1}d \qquad (4.1)$$

At the receivers, this approach results in y = d + w. Fig 4.2 illustrates this precoding technique, referred to as *channel inversion [11]*.

The columns of $\mathbf{H}^{\dagger}$ can be weighted to yield different SNRs for each user, depending on their given rate requirement. Channel inversion is a good solution for low-noise or high-power situations. However, it has been shown [5] that it does not result in the linear capacity growth with min (M_T,M_R) that should be achievable in the multi-user channel. This is because with a power constraint, an ill-conditioned channel matrix when inverted will require a large normalization factor that will dramatically reduce the SNR at the receivers.

The drawbacks of channel inversion are due to the stringent requirement that the interference at the receivers be identically zero.

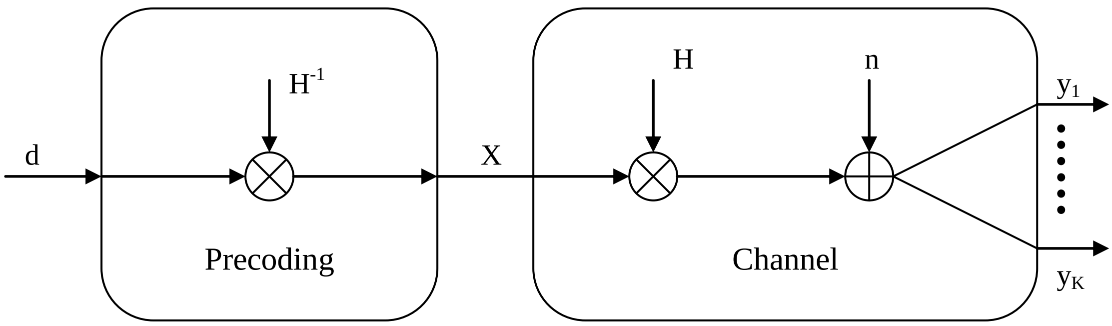

Fig. 4.2 Schematic diagram of Channel inversion

(ii) Regularized Channel Inversion

Allowing a limited amount of interference at each receiver allows one to consider a larger set of potential solutions that can potentially provide higher capacity for a given transmit power level, or a lower transmit power for a given rate point. This behavior is seen in the solutions that maximize sum capacity; they allow some level of MAI at each receiver. One simple approach with this idea in mind derives from linear minimum mean squared error (MMSE) receivers used in the uplink. If we assume white noise and power constraint *P*, the MMSE uplink receiver is given by

$$(H_U * H_U + K/PI)–1\ H_U\, y \qquad (4.2)$$

where H_U is the uplink channel. For the downlink, it is possible to assume a similar MMSE like structure, using

$$x = H^* \, (HH^* + \alpha I)^{-1} d \tag{4.3}$$

This type of “regularized” channel inversion was recently proposed in [14], and it was shown that the loading factor $\alpha = K/P$ maximizes the signal- to-interference-plus-noise ratio (SINR) at the receiver when this scheme is used. This simple procedure results in a solution that does achieve linear growth in throughput with min (M_T, M_R) , but at a rate that is somewhat slower than that for capacity.

Both types of channel inversion we have described are designed to achieve some SINR that is identical for each user. It is expected that in next-generation communication systems there will be an increasing need to support heterogeneous wireless services, which implies that each user may have different bandwidth and/or SINR requirements. One way to achieve this is to adjust the amount of power transmitted to each user.

This is straightforward with direct channel inversion because the subchannels created to each user are independent, but with regularized inversion, changing the power transmitted to one user changes the interference for all other users. This necessitates a beamforming solution where the beamforming vectors and power weights are jointly optimized. This is particularly challenging because there are numerous different optimizations, each of which has a different solution.

Examples include maximizing total throughput given a constraint on total transmitted power, or minimizing transmitted power under a set of quality of service (QoS) requirements (e.g., throughput and bit error rate) for each user. An alternative approach is to keep the transmitted power fixed and choose beamformers that achieve maximum SINR margin, the difference between the SINR requirement and the actual SINR [19].

4.1.3 Linear Precoding for Multi User Antennas System

(iii)Block Diagonalization

Consider cases where the users also have arrays, a scenario of interest for next-generation systems. Adding multiple antennas at each receiver makes it possible to consider the transmission of parallel data streams to multiple users, as accomplished, for example, by BLAST in a single-user system.

Channel inversion could still be employed in this case, but is not a particularly efficient solution, since forcing two closely spaced antennas belonging to a single user to receive different signals would require extra power when the channels for these antennas are highly correlated. It also ignores the possibility of the receiver employing beamforming of its own.

One solution to this problem is to use block channel inversion or *block diagonalization* (e.g., as proposed in[20]). This approach is essentially a generalization of channel inversion that optimizes the power transfer to a group of antennas rather than a single antenna. Like channel inversion for single antennas, this approach requires that the number of transmit antennas be larger than the total number of receive antennas (except in some special cases), and does not achieve capacity, but also offers relatively low computational cost.

Extending optimized beamforming schemes to situations where the receivers have multiple antennas is an even more challenging problem.

If the transmitter knows the beamforming weights used by the receivers, it can use this information to create a set of "virtual" single-antenna channels by treating the output of the receiver's beamformers (denoted $\mathbf{w}_j$) as the output of a single-antenna channel, and using a single antenna design for the transmitter's beamformers. This concept is illustrated in Fig. 4.3

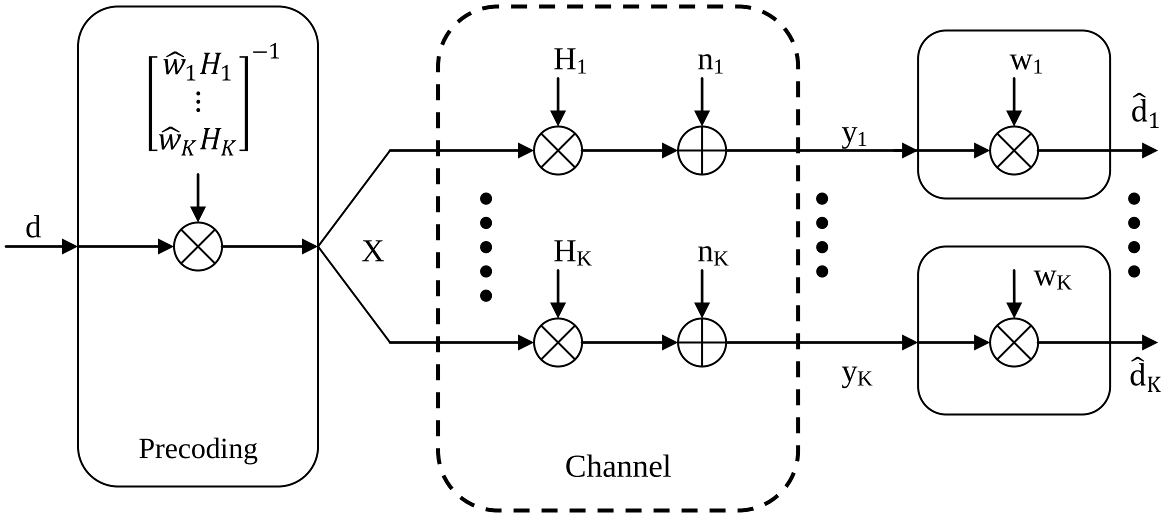

Fig. 4.3 An illustration of coordinated transmitter-receiver beamforming

Note that because all users have arrays, we have extended the notation of Eq. (2.1) so that the channel transfer function, noise vector, and received signal are now represented by the subscripted symbols $\mathbf{H}_j$, $\mathbf{n}_j$, and $\mathbf{y}_j$ for user *j*. The transmitter here is not using the actual beamformers $\mathbf{w}_j$, but estimates of them $\hat{w}_j$, to compute the transmit vectors. Since the optimal transmitter and receiver beamformers are dependent on each other, typically some arbitrary initial values are chosen, and the transmitter- and receiver-side beamformers are iteratively recalculated until some convergence criterion is met.

This is the most computationally expensive of all the schemes we have discussed so far, but it also offers the best performance.

4.2 Non Linear Precoding

Non-linear precoding techniques improve the performance of linear processing [21]. The main drawback of these schemes is that the real implementation is more expensive due to the complexity of the algorithms. As it can be seen in [14], DPC derives the capacity of the interfering channels when the interference is known at the transmitter. The main problem of DPC is that the increased complexity makes the implementation impossible. In order to reduce the computational cost, THP and VP, both non-linear techniques are generally used, which tend to reach DPC's performance at lower computational cost.

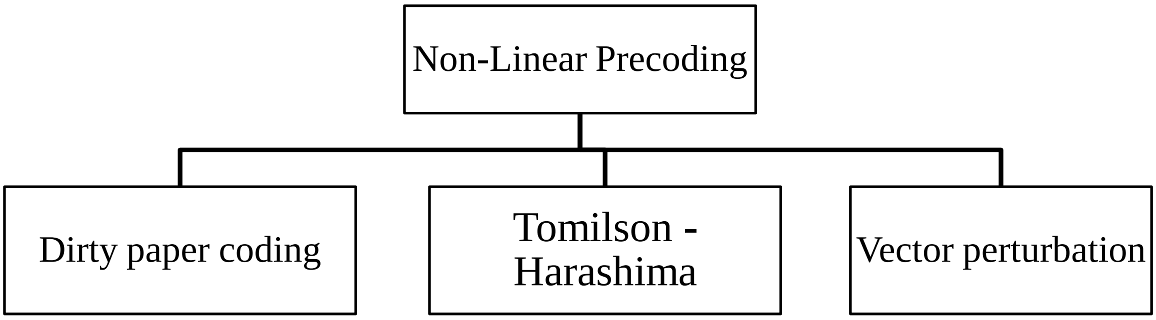

Fig. 4.4 Classification of Non-Linear Precoding Schemes

4.2.1 Dirty Paper Coding

We now turn to a nonlinear technique based on the concept of "writing on dirty paper" introduced by Costa [21]. In that paper, the traditional additive Gaussian noise channel is modified to include an additive interference term that is known at the transmitter

received signal = transmitted signal+ interference + noise.

The simplest thing to do in such a scenario would be to set the transmitted signal equal to the desired data minus the interference, but such an approach requires increased power. Costa proved the surprising result that the capacity of this channel is the same as if the interference was not present; no more power is needed to cancel the interference than is used in a nominal additive Gaussian noise channel! To use Costa's analogy, writing on dirty paper is information theoretically equivalent to writing on clean paper when one knows in advance where the dirt is. Costa's approach is theoretical, however, and does not provide a practical technique for approaching capacity.

4.2.2 Tomilson Harashima Precoding

THP was first proposed by Tomlinson [22] and Harashima [23] for the intersymbol interference (ISI) channel, while Fischer adapted it to MIMO systems in 2002 [24]. In order to mitigate DPC's computational complexity, which makes the implementation in real time systems impossible, THP is proposed for multiuser MIMO system precoding, reducing the cost with a reasonable performance. The idea of THP comes from the decision feedback equalizer (DFE) [25] filter considered for interference cancellation in point-to-point MIMO systems at the receiver side. Mainly, THP translates DFE filter to the transmitter side for multiuser interference cancellation under the assumption that the channel is perfectly known.

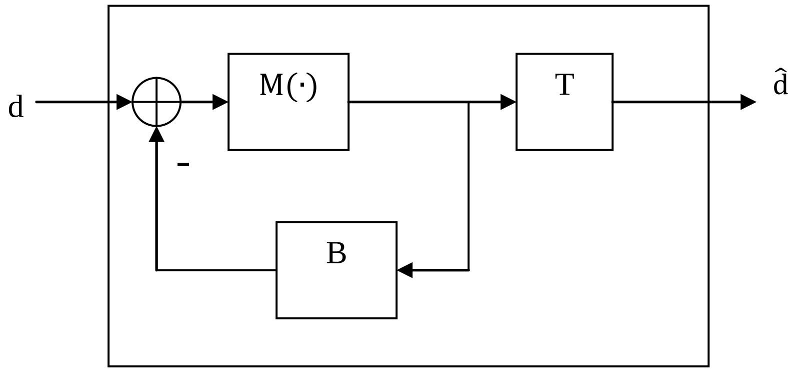

Fig. 4.5 Tomilson Harashima Precoding structure

As depicted in Fig. 4.5, THP is composed by two linear filters: the feedback filter B and the feed forward filter F. The former is a lower triangular matrix with zeros in the main diagonal. This structure, which is established to ensure the feedback loop, is also known as spatial causality [26], ensuring that only data symbols which have already been precoded are fed back. The basic idea of THP is the successive interference cancellation, being the symbols of different users precoded one after another. Initially the symbol of the first user is sent unaltered. After that, the symbol of the second user is transmitted taking into account the interference caused by the first one. This procedure is then continuously executed with the rest of users. Due to the interference cancellation process, the transmission power increases. In order to reduce it,a modulo operator M(·) is applied at both transmitter and receiver, as shown in Fig 4.5. The aim of the modulo operation is to move the symbols to a lower consumption region.

The design based on THP precoding can be also done following ZF [27][25] or MMSE [26][25] criteria, where the latter finds a trade-off between interference nulling and noise reduction.

4.2.3 Vector Perturbation Precoding

In THP each symbol traverses the modulo operator located inside the loop. This procedure can be seen as the addition of values of the type $a\tau + jb\tau$, which can be considered as a perturbation vector. Furthermore, the linear filters T and B depicted in Fig.4.5 can be combined in a filter T', depicted in Fig.4.6, removing the THP transmission loop. Hence, VP is considered a generalization of THP.

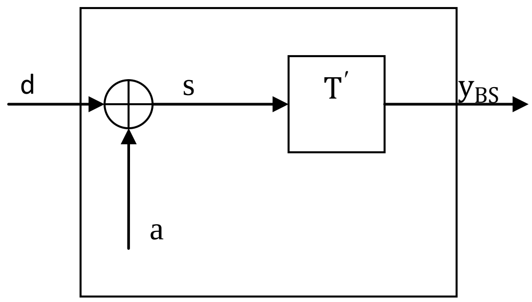

Fig.4.6 Vector Perturbation Precoding Structure

VP was introduced in [28] as a simple encoding algorithm that achieves near sum-rate. Basically, VP's main objective is the minimization of the un-scaled transmission power, or what is the same, the minimization of the scaling factor that amplifies the noise. Throughout the minimization of the power, the precoded symbols are mapped into a lower consumption region, improving in this way the SNR. Unlike THP, VP optimizes the perturbation vector directly instead of applying an iterative loop for user cancellation [29], considering all the possible perturbation vectors. The optimum vector is searched as the closest point in a lattice, which is a well-documented problem in the literature. Lattice searches have been shown to be NP-hard problems that grow exponentially in complexity with dimensionality [30].

A solution can be obtained by means of a sphere encoder (SE) [31], which searches only a certain number of vectors of the lattice that are into a hyper sphere instead of analyzing all the points of the lattice.

CHAPTER 5

LEAKAGE BASED PRECODING SCHEME

In multiuser MIMO systems, the Base Station (BS) transmits the message signals to different users in the cell through downlink communication. Since the same frequency and time slot is used in transmission to different users, it is necessary to come up with transmission schemes capable of suppressing interference. Interference suppression can be performed using linear precoding and decoding at both the transmitter and the receiver. Here, the scheme we have taken into account is a Leakage-Based Precoding. Here, leakage refers to the amount of the interference caused by a specific user on the other users.

5.1 Introduction to Leakage Precoding

In the multiuser case, several works have proposed schemes for choosing the weights of the precoders and decoders. For instance, some schemes choose the precoders and decoders optimally in order to maximize the output signal-to-interference plus- noise ratio (SINR) [32].

In these cases, the solution can only be obtained iteratively due to the coupled nature of the corresponding optimization problem and its complexity. Other works have proposed schemes for perfectly canceling the CCI for each user (also referred to as zero-forcing solutions) [32]-[35]. These schemes impose a restriction on the system configuration in terms of the number of antennas. Roughly, they require the number of transmit antennas at the base station to be larger than the sum of receive antennas of all users. This condition is necessary in order to provide enough degrees of freedom for the zero-forcing solution to force the CCI to zero at each user.

One way to apply such zero-forcing solutions when the (dimension) condition is not met is to resort to time-scheduling [36]. In this case, a subset of the users communicates at each time slot such that the total number of receive antennas for active users at any time instant satisfies the required dimension condition [37].

We pursue an alternative approach for designing transmit beamforming vectors based on the concept of signal *leakage*, as advanced in [38] and subsequently used in [39]. While CCI refers to the interference at a desired user that is caused by all other users, leakage refers to the interference caused by the signal intended for a desired user on the remaining users. That is, leakage is a measure of how much signal power leaks into the other users.

The performance criterion for choosing the beamforming coefficients will be based on maximizing the *signal-to-leakage-and-noise ratio* (SLNR) for all users simultaneously. While the problem of maximizing the alternative so-called signal-to-interference noise ratio (SINR) for all users has already been studied, no closed form solutions are available due to the complexity and the coupled nature of the resulting optimization problem. On the other hand, the leakage-based criterion leads to a decoupled optimization problem and admits an analytical closed form solution [38], [39].

Moreover, in contrast to the zero-forcing solution, the leakage scheme does not require any dimension condition on the number of transmit/receive antennas. It further takes into account the influence of noise when designing the beamforming vectors. By doing so, the leakage solution outperforms zero-forcing solutions even when the dimension requirement for zero-forcing solutions is satisfied.

5.2 System Model for Leakage Based Precoding

Consider a downlink multi-user environment with a base station communicating with K users. The base station employs N transmit antennas and each user could be equipped with multiple antennas as well. Let M_i denote the number of receive antennas at the ith user. A block diagram of the system is shown in Fig 5.1, where $s_i(n)$ denotes the transmitted data intended for user i at time n. The scalar symbol $s_i(n)$ is multiplied by an $N \times 1$ beamforming vector $\mathbf{w}_i$ prior to transmission over the channel. In this way, the overall $N \times 1$ transmitted vector at time n is given by

$$x(n) = \sum_{k=1}^{K} w_k s_k(n) \qquad N \times 1 \tag{5.1}$$

The data $s_i(n)$ and the beamforming vector w_k are assumed to be normalized as follows:

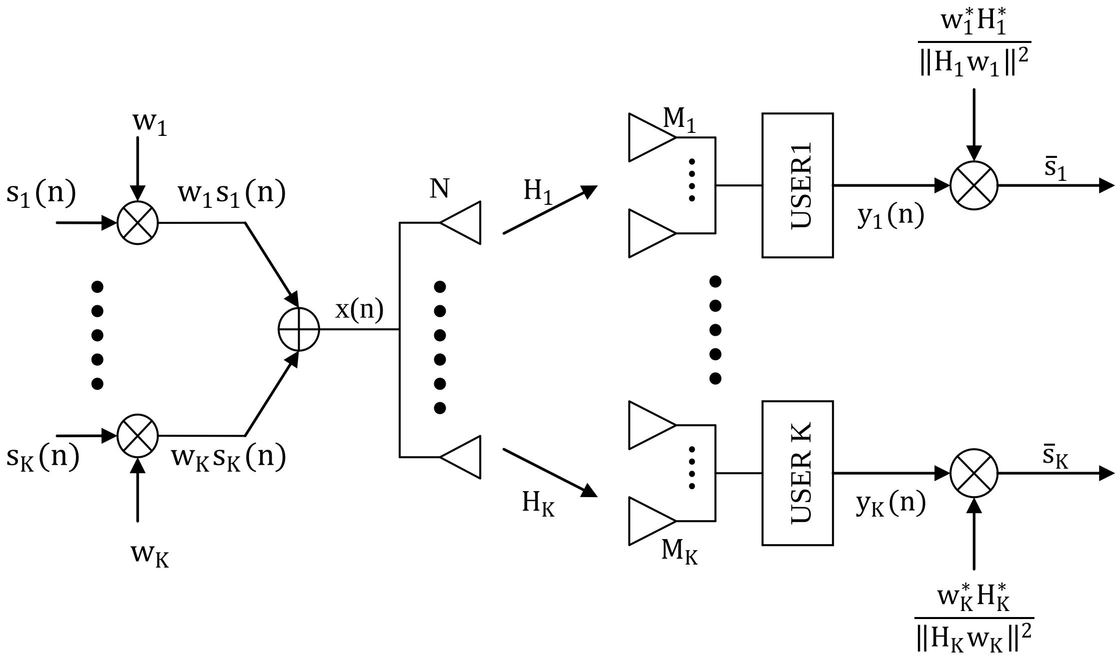

Fig. 5.1 Block diagram of Multi-user beamforming wireless communication system

$$E|s_k(n)|^2 = 1 \quad , \quad ||w_k||^2 = 1 \qquad \text{for k=1 to K} \tag{5.2}$$

$$y_i = H_i x(n) + n_i(n) \qquad (M_i \times 1)$$

$$= H_i \sum_{k=1}^{K} w_k s_k + n_i(n) \tag{5.3}$$

The elements of Hi are assumed to be complex Gaussian variables with zero-mean and unit-variance $ETr(H_i H_i^*) = M_i N$, the additive noise vector $n_i(n)$ is assumed to have independent complex Gaussian elements with variance σ^2_i and is spatially white i.e.,

$$E[n_i(n)n_i^*(n)] = \sigma_i^2 I_{M_i} \delta_{ij} \tag{5.4}$$

where I_{M_i} is the $M_i \times M_i$ identity matrix. Since the random quantities Hi, $s_i(n)$, and $n_i(n)$ are assumed independent.

We assume initially that the channel matrices Hi, i = {1, . . .,K}, are available at the base station (e.g., either through reverse channel estimation in time-division-duplex (TDD) or feedback in frequency-division-duplex (FDD)). We also assume that the channel matrix Hi is known at the corresponding receiver i, but is not required to be known by the other users. Furthermore, we assume a slow-fading wireless channel with packet-based transmission where the channel is quasi-static over a packet length, and changes independently between consecutive transmissions.

5.3 Multi-User Beamforming and Leakage

We start from the received signal (2) by user *i* and drop the time index *n* for notational simplicity so that

$$y_i = H_i w_i s_i + H_i \sum_{k\neq 1}^{K} w_k s_k + n_i \qquad (M_i \times 1) \tag{5.5}$$

where the second term is the co-channel interference (CCI) caused by the multi-user nature of the system. The signal-to interference- plus-noise ratio (SINR) at the input of the receiver is given by

$$SINR_i = \frac{\|H_i w_i\|^2}{M_i \sigma_i^2 + \sum_{k=1,k\neq i}^{K} \|H_i w_k\|^2} \tag{5.6}$$

One could use the SINR expression in (5.6) for i = {1, . . .,K} as an optimization criterion for determining the$\{w_i\}_{i=1}^K$, i.e., the beamforming vectors $\{w_i\}_{i=1}^K$ would be determined so as to maximize the SINR for each user i. However, this criterion generally results in a challenging optimization problem to with K coupled variables {**w**i} [40], [41]

To avoid solving the coupled problem, in prior work on downlink multi-user MIMO systems, the major focus has been on cancelling the CCI term perfectly by using zero forcing (ZF) schemes. For example in [32], [35], the criterion for choosing the beamforming vectors $\mathbf{w}_i$, i = {1, . . .,K}, has been to enforce the conditions

$$H_i w_k = 0 \quad \text{for } i, k = \{1, 2, \dots, K\}, i \neq k \tag{5.7}$$

This solution results in good performance since it completely cancels the CCI at every receiver. However, this solution is sensitive to unmodeled interferences and other sources of distortion. Moreover, choosing the $\{\mathbf{w}_k\}$ according to (5.7) imposes a strong condition on the system configuration in terms of the number of antennas that are needed. Specifically, in order for the problem (5.7) to be well posed (i.e., in order for solutions **w***k* to exist), one needs to require

$$N > \max_i \{\textstyle\sum_{k=1,k\neq i}^{K} M_k\} \tag{5.8}$$

That is, the number of transmit antennas essentially needs to be as large as the number of all receive antennas combined. Thus the scheme (5.6) requires an increase in the number of base station antennas as the number of users or the number of receive antennas per user increase. Also, the ZF solution can lead to a small signal-to-noise-ratio since it ignores the noise power in finding $\mathbf{w}_i$.

For these reasons, we shall rely on an alternative criterion that relaxes the requirement (5.8) and that takes the noise contribution into account when choosing $\mathbf{w}_i$. The criterion is based on defining a so-called signal-to leakage- plus-noise ratio (SLNR) as advanced in [38] and used in [39]. It leads to a closed form characterization of the optimal $\{\mathbf{w}_i\}$ in terms of generalized eigen value problems.

Moreover, the scheme does not require the dimensionality condition (5.8). The following is a summary of the leakage-based solution from [38] [39]. Start from (5.5) and note that the power of the desired signal component for user *i* is given by$\|H_i w_i\|^2$. At the same time, the power of the interference that is caused by user *i* on the signal received by some other user *k* is given by $\|H_k w_i\|^2$. We thus define a quantity, called *leakage* for user *i*, as the total power leaked from this user to all other users see Fig 5.2

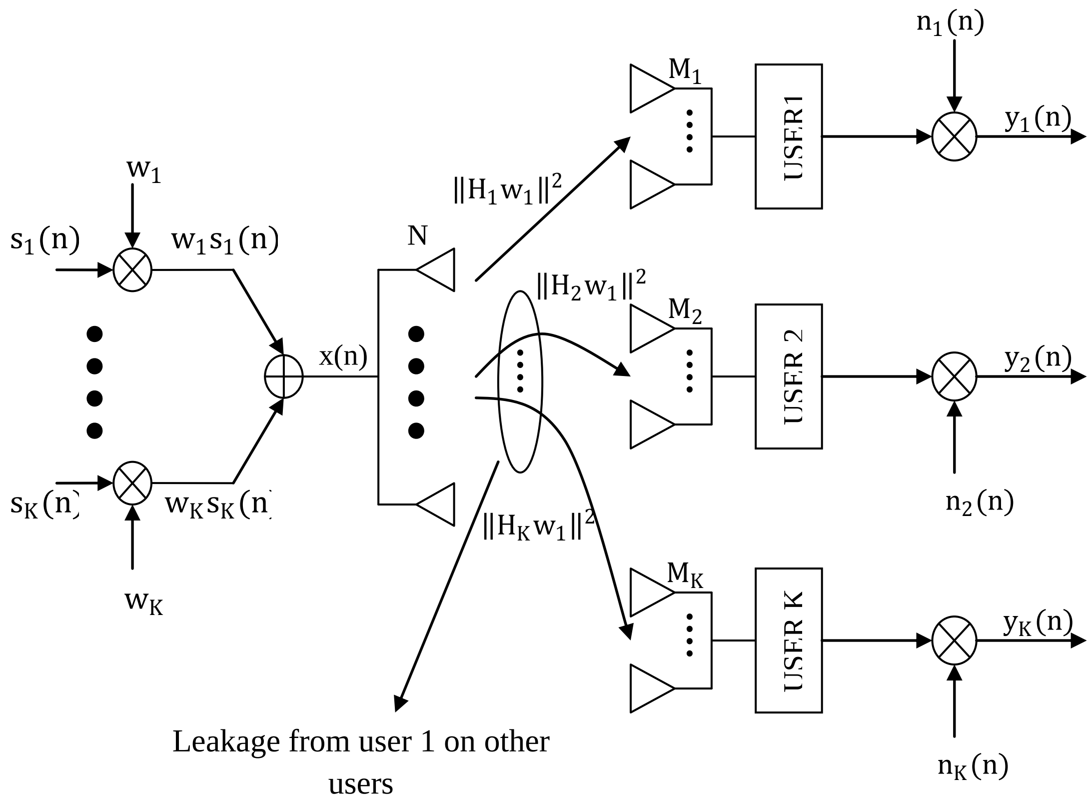

Fig. 5.2 A block diagram depicting the leakage from user 1 on other users.

$$\sum_{k=1,k\neq i}^{K} \|H_i w_k\|^2 \tag{5.9}$$

For each user *i*, we would like its signal power, $\|H_i w_k\|^2$, to be large compared to the noise power at its receiver (i.e.,$M_i \sigma_i^2$). We would also like $\|H_i w_k\|^2$ to be large compared to the power leaked from user-i to all other users, i.e. $\sum_{k=1,k\neq i}^{K} \|H_i w_k\|^2$, These considerations motivate us to introduce a figure of merit in terms of so-called signal-to leakage- noise ratio (SLNR) defined as

$$\mathrm{SLNR}_i = \frac{\|H_i w_i\|^2}{M_i \sigma_i^2 + \sum_{k=1,k\neq i}^{K} \|H_i w_k\|^2} \tag{5.10}$$

Using this concept of leakage, we can formulate an optimization problem which instead of dealing with the total interference of all users on user *i* as in (5.6), it deals with the total interfering power that user *i* causes on all other users. Specifically, we would like to select beamforming vectors $\mathbf{w}_i$, i = {1, . . .,K}, such that (5.10) is maximized over $\mathbf{w}_i$ and subject to $\|w_i\|^2 = 1$

$$\mathrm{SLNR_i} = \frac{\|H_i w_i\|^2}{M_i \sigma_i^2 + \|\widetilde{H}_i w_i\|^2} \tag{5.10}$$

where $\widetilde{H}_i = [H_1 \dots H_{i-1} H_{i+1} \dots H_K]^T \qquad \sum_{k\neq i} M_k \times N$ (5.11)

is an extended channel matrix that excludes **H***i* only. It was shown in [12] that the solution is given by

$$w_i^o \propto \max \mathrm{eigenvector}((M_i \sigma_i^2 + \widetilde{H}_i^* \widetilde{H}_i)^{-1} H_i^* H_i) \tag{5.12}$$

in terms of the eigenvector corresponding to the largest eigen value of the matrix $(M_i \sigma_i^2 + \widetilde{H}_i^* \widetilde{H}_i)^{-1} H_i^* H_i$. the norm w_i^o is adjusted to $||w_i^o||^2 = 1$

For comparison purposes, we also mention the zero-forcing solution for the choice of **w***i* from [47], [48],

$$w_i = G_i u_i \tag{5.13}$$

Where $G_i = I - \widetilde{H}_i^\dagger \widetilde{H}_i$ and $u_i \propto \max.\mathrm{eigenvector}(H_i G_i)$ and $\widetilde{H}_i^\dagger$ is the pseudo-inverse of $\widetilde{H}_i$again the norm of $\mathbf{w}_i$ is normalized to unity. Note that $H_i G_i$ reduces to zero if $\widetilde{H}_i$ is a tall matrix suggesting that $\mathbf{w}_i = 0$.

This explains why the zero-forcing solution is only applicable when the dimension condition [32] is satisfied. It is worth noting that the computational complexity of the ZF solution (5.13) and the leakage-based solution (5.12) are similar, namely, $O(N^3)$.

Observe that the vector w_i^o that optimizes the SLNR is not optimal relative to the SINR criterion (5.6), which is the criterion that is usually used to evaluate system performance. As mentioned before, optimizing (5.6) over $\mathbf{w}_i$ is challenging and we are therefore using the alternative SLNR criterion.

5.4 Introduction to X-Channel

Interference is the key property of wireless communication due to the broadcasting nature of wireless links. The model that is widely used to study the behavior and the corresponding management of interference is the interference channel . Recent results have also found approximations to the capacity regions of certain K-user interference channels in the high signal-to-noise ratio (SNR) regime, [42] approximates the capacity region of the fully connected K-user interference channel with time-varying channel coefficients as

$$\mathrm{C(SNR)} = \frac{\mathrm{K}}{2}\ \mathrm{log(SNR)\_o(log(SNR))} \qquad (5.14)$$

where SNR represents the total transmit power of all nodes when the local noise power at each receiver is normalized to unity. In other words, it was shown that the time-varying K- user interference channel has K/2 degrees of freedom. Similar capacity approximations of the K-user (K > 2) interference channel with constant channel coefficients (i.e., not time varying or frequency-selective) are not known in general.

The notion of generalized degrees of freedom (GDOF) [43] to study the performance of various interference management schemes . As its name suggests, the idea of GDOF is a generalization of the concept of degrees of freedom originally introduced in [45]. Unlike the conventional degrees of freedom perspective where all signals are approximately equally strong in the dB scale, the GDOF perspective provides a richer characterization by allowing the full range of relative signal strengths in the dB scale. The idea of GDOF is powerful because in the multiple access, broadcast and twouser interference channels, achievable schemes that are optimal from a GDOF perspective also achieve within a constant number of bits of capacity [45].

One of the key features of the X channel is that, unlike the two-user interference channel, it provides the possibility of interference alignment [46] [47]. Interference alignment refers to the construction of signals such that they overlap at receivers where they cause interference, but remain distinguishable at receivers where they are desired. Interference alignment is the key to the degrees of freedom characterizations of the X channel with two or more users [48], and for the interference channel with three or more users [49]. Since the potential for interference alignment does not arise in the two-user interference channel, the two-user X channel provides the simplest possible setting for interference alignment, in terms of the number of transmitters/receivers and channel coefficients. It is shown in [46] that, due to interference alignment, the two-user X channel has 4/3 degrees of freedom (assuming time-varying channels), while the two-user interference channel has only 1 degree of freedom.

5.5 System Model of X-Channel

We consider the two user MIMO Gaussian X-channel in Fig. 5.3 which is same as the MIMO Gaussian IC except that each transmitter has separate independent messages for both receivers. The MIMO Gaussian XC, is described by the following equations

$$y_1 = H_{11}x_1 + H_{12}x_2 + z_1 \qquad (5.15a)$$

$$y_1 = H_{21}x_1 + H_{22}x_2 + z_2 \qquad (5.15a)$$

where xi is a $t_i \times 1$ vector, y_i, z_i are $r_i \times 1$ vectors, H_{ij} is $r_i \times t_j$ channel matrix and t_i, r_j are the number of antennas at transmitter i, receiver j respectively. Noise vector $z_i \sim N(0, I_{ri\times ri})$ and is i.i.d. across time. The average power constraint on the ith transmitter over an n symbol duration is

$$\frac{1}{N}\sum_{k=1}^{n} E[x_{ik}\, x_{ik}^T] \in Q \qquad (5.16)$$

Rate R_{ij} is the rate of reliable transmission from transmitter j to receiver i. An achievable rate over the MIMO Gaussian XC is characterized by the rate 4-tuple (R_{11},

R_{21}, R_{12}, R_{22}). The capacity region is defined as the closure of all achievable rate tuples, and the sum capacity is the maximum achievable sum rate $R_{11} + R_{21} + R_{12} + R_{22}$.

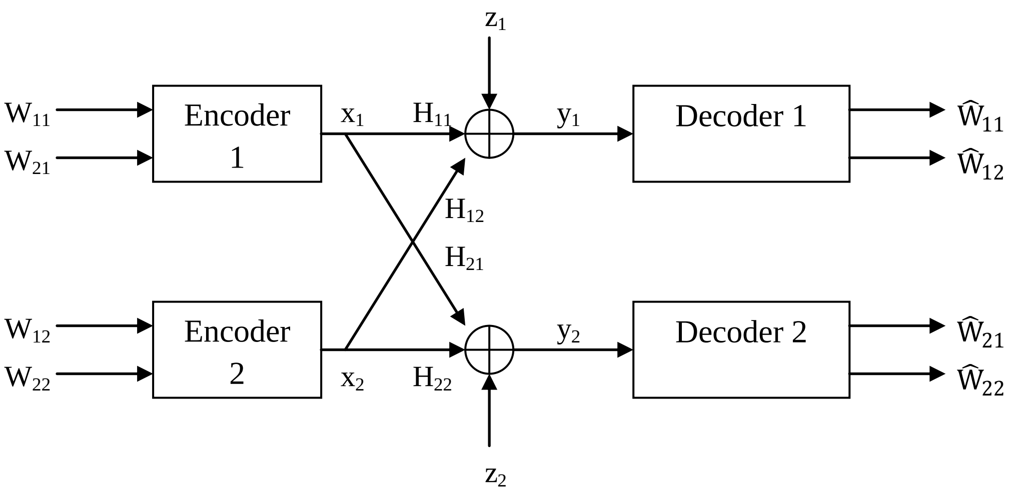

Fig. 5.3 System model of two user MIMO XC

This system model can be extended to multi user scenario. There will be no change in the characteristic equation of output which are explained in (5.15a) and (5.15b). Thus, there can be processing on the transmitter side when this channel is used for multi user and exposed to strong CCI which need a processing called precoding.

5.6 Simulation Results of Inculcated Leakage precoding on X-channel

For a system we have number of transmit antennas 8 and the receive antennas are 4 and number of user 3 with having DoF 3. We perform the simulation on the aspect of elapse tiume to drive the leakage precoding and other type of precoding algorithm. The results shows that for every doF leakage precoding has the least elapse time to process through X-channel. The results are given for DoF=2,3 in Fig. 5.4,5.5 and 5.6 respectively.

Here the Dof= 2/user depicts that for a leakage precoding algorithm it shows almost 0.99 seconds to process for both the case when Dof=2 and 3 per User repectively. On the other hand the CI algorithm and MAX-SINR algorithm has varied performance that is for user 1 CI algorithm shows 6.07 seconds at DoF= 2/user whereas for the same case leakage algorithm shows 0.9278 sec and max-SINR has 1.18 second. Thus leakage based algorithm seems to be a suited one for X-channels

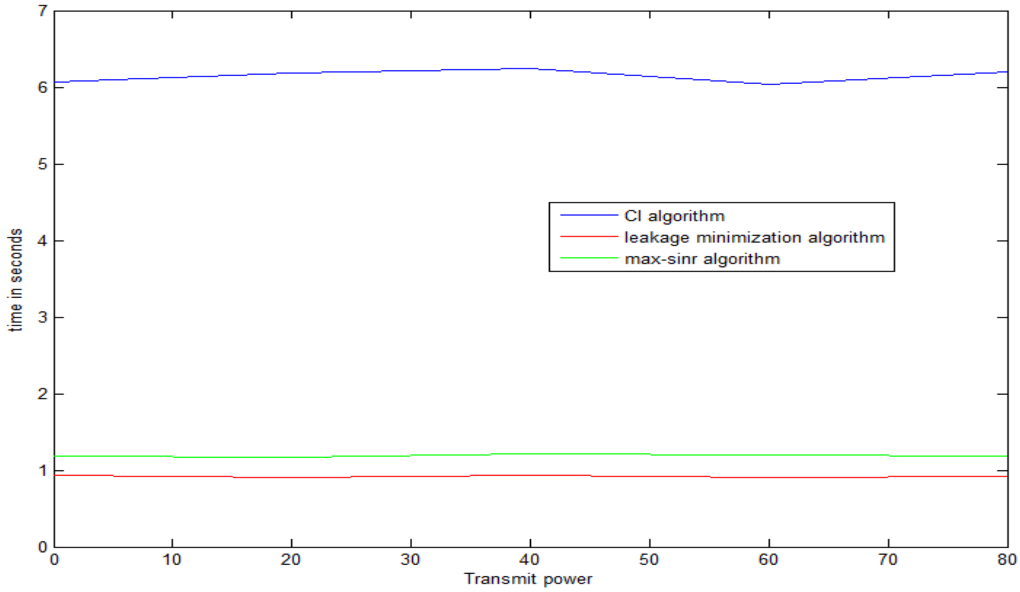

Fig. 5.4 Plot of Transmit power vs time elapsed for DoF=2/user

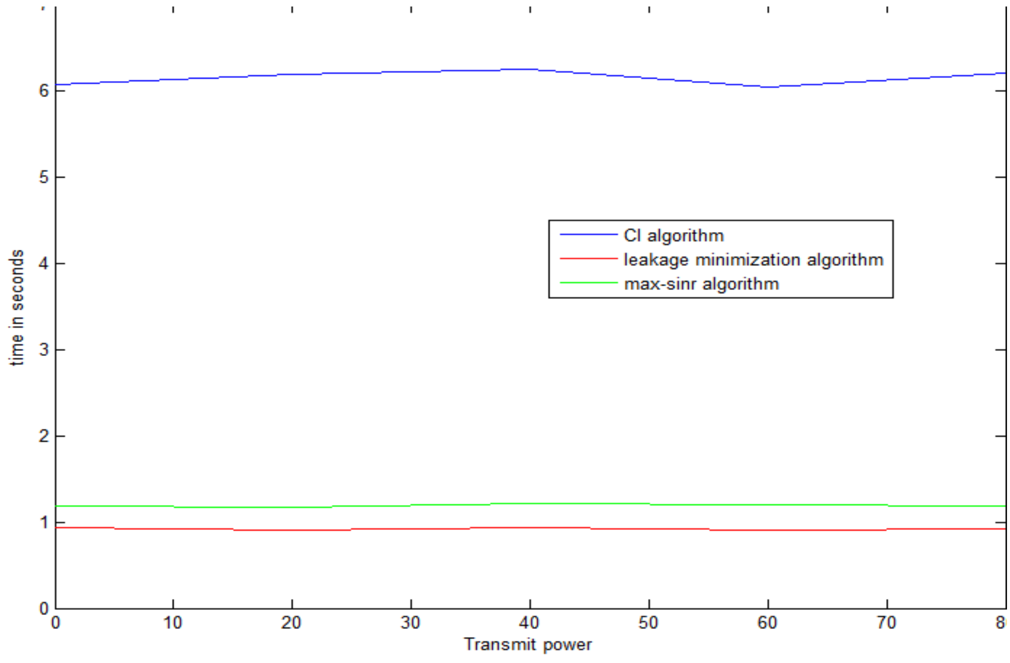

Fig 5.5 Plot of Transmit power vs time elapsed for DoF=3/user

CHAPTER-6

BER PERFORMANCE OF PRECODING TECHNIQUES

Multiple-input multiple-output (MIMO) systems are now a formidable area of focus for wireless communications because of its high capacity, increased diversity and interference suppression properties. Now we are focusing on analyzing different linear and non- linear precoding schemes utilized for mitigating co-channel interference among different users. Notable techniques include dirty paper and its sub-optimal cases, channel inversion, block diagonalization and leakage precoding are discussed in subsequent chapters. The bit error rate (BER) expressions with each precoding technique in context to single as well as multi-user MIMO systems are derived. BER results are also presented for different channel models. Depending upon these results best precoding scheme is suggested for different number of users.

6.1 Linear Precoding : Block Diagonalization

Block diagonalization is one of the approaches for linear precoding in MIMO broadcast channels in which power optimization is done for group of antennas rather than a single antenna. The received signal at the ith user is given by

$$y_i = H_i w_i x_i + H_i \sum_{j=1, i\neq j}^{K} w_j x_j + n_i \tag{6.1}$$

The above equation can be decomposed in vector from as $y_i=\begin{Bmatrix} vec(Re(y_i)) \\ vec(Im(y_i)) \end{Bmatrix}$,$x_i=\begin{Bmatrix} vec(Re(x_i)) \\ vec(Im(x_i)) \end{Bmatrix}$, and $n_i=\begin{Bmatrix} vec(Re(n_i)) \\ vec(Im(n_i)) \end{Bmatrix}$. The matrices are of order $2N_RT \times 1$, $2N_T \times 1$ and $2N_RT \times 1$ respectively. The necessary and sufficient condition for block diagonalization to take place is

$$H_i w_j = 0 \;\; \forall \{ i \neq j \} \tag{6.2}$$

Since H_i has zero mean and unit variance and w_i with $w_i^H w_i = I$ are independent, then linear transformation of $\overline{H}_i = (H_i w_i)$ is also a Gaussian random variable with zero mean and unit variance.The PDF of $||H||_F^2$ is Chi-square distributed.

Thus, the effective SNR of the Block diagonalization precoding at the i^{th} user end is

$$\gamma_i^{BD} = \gamma_0 ||\overline{H}_i||_F^2 \tag{6.3}$$

where $\gamma_0 = E_s/R_0 N_0$. E_s is the symbol energy at the transmitter and $N_0/2$ is the variance of the AWGN, and erfc(x) is the complementary error function i.e., $\mathrm{erfc}(x) = \int_x^\infty e^{-t^2} dt$. Thus, average effective SNR [5] is given by

$$\mathcal{E}\{\gamma_i^{BD}\} = \frac{E_s}{R_0 N_0} N_R \tag{6.4}$$

Instantaneous BER expression for BD-precoding using QAM can be computed as

$$\mathrm{BER}_{QAM} = \frac{2}{K}\left(1 - \frac{1}{\sqrt{2^\beta}}\right) \sum_{k=0}^{K-1} \mathrm{erfc}\left(\sqrt{\frac{1.5 \sum_{i=1}^{K} \gamma_i^{BD} N_R \sum_{j=1}^{M_R} \sum_{i=1}^{M_T} |\overline{H}_{i,j}|^2}{R_0 (2^\beta - 1)}}\right. \tag{6.5}$$

where β is number of bits/symbol in QAM constellation.

6.2 BER Expressions of Non-Linear Precoding

6.2.1 Dirty Paper Precoding:

Recent theoretic work on MU-MIMO communication has exhibit that the sum capacity is achieved with dirty paper coding for a broadcast channel. In this technique, interference is pre-cancelled at the transmitter with complete knowledge of transmitter and perfect CSI. The suboptimal case of dirty paper coding are vector perturbation and Tomilson-Harashima precoding (THP) precoding techniques. Out of these, vector perturbation precoding has much lower complexity, it shifts most of signal processing to the transmitter part which allows users to find their data in a simple and non-cooperative manner.

6.2.2 Vector Perturbation Precoding (VPP):

It mainly works on assumptions like availability of perfect CSI at both transmitter and receiver, knowledge of channel-dependent power normalization factor and having an infinite dynamic range, if any of its assumptions are violated, it will degrade the performance significantly and results in error flow.

In this scheme, initially channel inversion is performed at the base station or at the transmitter side, then it is precoded by perturbation of transmitting vector so as to reduce the transmit power. A channel- and data-dependent power normalization is done so that it meets the transmit power constraint. At the receiver side, the user recovered the transmitted data symbols by employing scaling operation on the received signal, a modulo operation is performed to compensate vector perturbation and quantization is done so that the result can locate to the nearest constellation point.

However, if transmission blocks length increases then power scaling factor merges to a defined limit. Also it's very crucial to have accurate CSI at the transmitter otherwise sum capacity wouldn't improve with SNR. It requires two constraints on power, constraint on short term power is $\frac{1}{M}\sum_{n=1}^{M} ||s_n||^2 \leq P$ and other constraint on long term average power is $E\{||s_n||^2\} \leq P$ for $M \rightarrow \infty$, where M is the block duration of the transmission. The instantaneous power constraint for M=1 becomes $||s_n||^2 \leq P$ and per-antenna power constraint becomes $|s_{n,i}|^2 \leq P/N_T$, where n=1,2…M. Thus the nominal SNR can be written as

$$\rho = P/\sigma_w^2 \tag{6.6}$$

where σ_w^2 is noise variance. During every instant of time n, a base station transmits a symbol vector of length i $s_n=(s_{n,1} \ldots s_{n,i})^T$ having independent elements and uniformly distributed over symbol alphabet and normalized that is $E\{s_{n,i}^2\}=1$. The transmit vector is given by

$$x_n = \sqrt{\frac{P}{\Gamma}}\hat{H}^{\dagger}(s_n + \tau z_n^*) \tag{6.7}$$

where, Γ is a real-valued scalar factor, $\hat{H}^{\dagger} = \hat{H}^{\dagger}(\hat{H}\hat{H}^{H})^{-1}$, $\hat{H}^{\dagger}$ a pseudo-inverse of $\hat{H}$, z_n^* is perturbation vector having integer which are Gaussian in nature and τ is the translation parameter. The perturbation vector z_n^* and power normalization factor Γ is obtained as

$$z_n^* = \arg \min_{z \in G^i} ||\,\hat{H}^{\dagger}(s_n + \tau z_n^*)||^2 \tag{6.8}$$

$$\Gamma = \frac{1}{M}\sum_{n=1}^{M}\Gamma_n$$

with $\Gamma_n \triangleq ||\hat{H}^{\dagger}(s_n + \tau z_n^*)||^2$. As we have assumed perfect CSI then for n^{th} time slot the receive signal for i users is given as

$$y_i = \sqrt{\frac{P}{\Gamma}}\hat{H}^{\dagger}\left(s_{n,i} + \tau z_{n,i}^*\right) + n_{n,i} \tag{6.9}$$

$s_{n,i}$ can be detected by multiplying the received signal with $\sqrt{\Gamma/P}$, followed by the modulo-τ operation such that $z_{n,i}^*$ is removed and then quantized to symbol alphabet. The scaling factor $y_{n,i} \triangleq \mu y_{n,i}$, where μ is the scalar factor chosen as $\mu = (1+\chi)\sqrt{\frac{\Gamma}{P}}$ such that we obtain $r_n = s_n + \tau z_n^* + \nu_n$,where ν_n is the interference plus noise term.

6.2.3 Tomilson-Harashima Pecoding:

This technique can be implemented in two forms: Zero forcing (ZF)-THP and minimum mean squared error (MMSE)-THP depending upon SNR values. In THP as shown in Fig.6.1. The sampled output is given as

$$y_i = \sum_{i=0}^{L-1} h_i s_{i-l} \tag{6.10}$$

ISI can be overcome if transfer function of precoder equals to inverse of channel's transfer function. Output of precoder may increase or diverges to zero, when the transfer function of channel is tends to zero. Thus, to prevail over this limitation T(D) is introduced before h(D) as well as the noise enhancement is also avoided, this makes the non-linear transfer function with z(D) peak limited. Assume $z_{min} = -z_{max}$ then

$$y(D) = s(D) - 2Bz_{max} \tag{6.11}$$

where B is an integer, condition on B is to restrict the peak value of $z(D)$ is given as

$$z_{min} \le s(D) - 2Bz_{max} - v(D) \le z_{max} \quad (6.12)$$

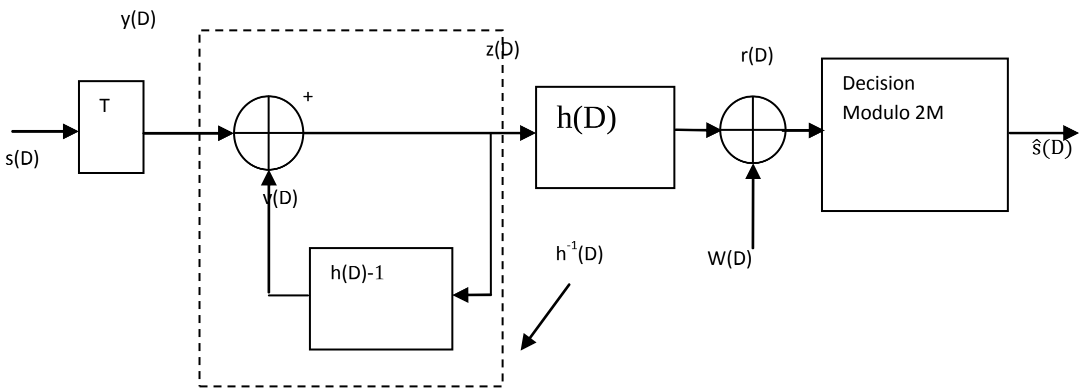

Fig. 6.1 Block diagram THP precoding Scheme

$$(2B-1)z_{min} \le s(D) - v(D) \le (2B+1)z_{max} \quad (6.13)$$

where $2Bz_{max}$ is output of quantization operation, thus this relation will decides the implementation of T. Now at the receiver$\hat{y}(D) = y(D) + n(D)$, where $n(D)$ is white Gaussian noise. Estimation of input sequence s(D) is $\hat{y}(D) + 2Bz_{max}$ .If input series is also a peak limited i.e.

$$s_{min} \le s(D) \le s_{max} \quad (6.14)$$

Or $$s_{min} - 2Bz_{max} \le \hat{y}(D) \le s_{max} + 2Bz_{max} \quad (6.15)$$

Assume, $s_{max} - s_{min} < 2z_{max}$ and, $B' = -B$. Let

$$x_{max} - z_{max} \le d \le x_{min} + z_{max} \quad (6.16)$$

Comparing (6.15) and (6.16)

$$(2B'-1)z_{max} \le \hat{y}(D) - d \le (2B'+1)z_{max}$$

Here $2B'z_{max}$ is an output of quantizer obtained from $\hat{y}(D) - d$, the estimation of s (D) is

$$\hat{s}(D) = \hat{y}(D) - 2B'z_{max} \quad (6.17)$$

$$(2B' - 1)z_{max} + d \le \hat{y}(D) \le (2B' + 1)z_{max} + d \quad (6.18)$$

(i) MMSE THP design

Consider w and w' are precoding and inverse of precoding matrices. To quality precoder design, obtain error matrix as

$$e = s - \hat{s} = s - (w'Hws + w'n) \quad (6.19)$$

Thus, covariance of error matrix or the MSE matrix can be defined as

$$MSE = E\{ee^H\} = (w'Hw - I)(w'Hw - I)^H + w'R_{nn}w'^H \quad (6.20)$$

where, Z_e, p_0 and E are the $i \times i$ diagonal positive definite weight matrix, total available power and E is expectation performed with respect to the distribution of s and w, The method of Lagrange duality and the Karush-Kuhn-Tucker condition [50] can be used to solve optimization problem as

$$L(\mu, w', w) = tr\left[W_e(w'Hw - I)(w'Hw - I)^H + Z_e w'R_{nn}w'^H\right] + \mu[tr(ww^H) - p_0]$$

(6.21)

where μ is chosen such that it could meet the constraint on power. It can be shown that w' and w is optimal if they satisfy the following conditions

$$\nabla_{U'}L(\mu, w', w) = 0 \quad (6.22)$$

$$\nabla_U L(\mu, w', w) = 0 \quad (6.23)$$

$$\mu \ge 0; \; tr(ww^H) - p_0 \le 0 \quad (6.24)$$

$$\mu[tr(ww^H) - p_0] = 0 \quad (6.25)$$

Substituting the (6.21) in (6.22) and (6.23) we obtain the expression for w and w' as shown below

$$Hw = Hww^H H^H w^H + R_{nn} w'^H \tag{6.26}$$

$$Z_e w' H = w^H H^H w'^H W_e w' H + \mu w^H \tag{6.27}$$

The optimum w and w' matrices can be found out as

$$w = V\phi_w \tag{6.28}$$

and

$$w' = \phi_{U'} w^H H^H R_{nn}^{-1} \tag{6.29}$$

where $\phi_{w'}$ and ϕ_w are the $(i \times i)$ diagonal matrices having non-negative elements on the diagonal. Define Λ as diagonal matrix containing A nonzero eigen values i.e. $\{\lambda\}_{i=1}^{A}$ arranged in a decreasing order from top left to bottom-right and it contains non zero eigen values also A=rank($H^H R_{nn}^H H$) = rank(H). Different sub-channels have different SNR, Thus, combined SNR can be written as

$$SNR = (w^H H^H w'^H (w' R_{nn} w'^H)^{-1} w' Hw \tag{6.30}$$

If R_{xx}=I, from (6.28) and (6.29), SNR is simplified to,

$$SNR = \Phi_w^2 \Lambda = (Z_e^{1/2} \mu^{-\frac{1}{2}} \Lambda^{1/2} - I)_+ = \gamma D \tag{6.31}$$

where D is a diagonal matrix of relative SNR's across sub-channels, with $\sum_{i=1}^{K} d_i = 1$ and $E\{ee^H\}$ for optimum U and U'

$$E\{ee^H\} = W_e^{-1/2} \Lambda^{-1/2} \mu^{1/2} \tag{6.32}$$

From (6.31) and (6.32) SNR is,

$$SNR = E\{ee^H\}^{-1} - I \tag{6.33}$$

Hence we have equal SNR on each sub-channel or equal MSEs regardless of choice of the error-weights. The optimum w' can be obtained as

$$w'^{*} = w^H w^H (Hww^H H^H + R_{nn})^{-1} \tag{6.34}$$

Since, $$\mathrm{MSE}(w) = (I + w^H H^H R_{nn}^{-1} H w)^{-1} \tag{6.35}$$

Therefore, the MSE for the i^th diagonal element can be written as

$$\mathrm{MSE}_i = \frac{1}{1+w_i^H H^H R_{nn,i} H w_i} \tag{6.36}$$

where u_i is the i^{th} column of matrix w. To express MSE in terms of SINR, the i^{th} diagonal element of SINR can be upper bounded by

$$[\mathrm{SINR}]_i \leq w_i^H H^H R_{nn,i} H w_i \tag{6.37}$$

Thus, the SINR can be related to MSE as

$$\mathrm{SINR}_i = \frac{1}{\mathrm{MSE}_i} - 1 \tag{6.38}$$

Thus, the probability of symbol error can be related to SINR as

$$P_e(\mathrm{SINR}) = \alpha Q(\sqrt{\eta \mathrm{SINR}}) \tag{6.39}$$

where α, η are scalars and depends on the scheme of modulation. Thus, BER can be expressed as

$$\mathrm{BER} \simeq P_e / \log_2(L) \tag{6.40}$$

6.2.4 Leakage Based Precoding

As discussed before, the capability of non-linear precoding technique to tackle inter-user interference can be enhanced by considering power leakage among different users. In this technique, we assumed number of transmit antennas at the base station has to be larger than the sum of receiving antennas of all users i.e.

$$M_T > \sum_{r=1, r\neq i}^{K} M_r \tag{6.41}$$

Above condition ensues zero co-channel interference (CCI) at each user. If necessary, Time scheduling is applied when the dimension conditions are not met.

The beamforming vectors are designed based on the concept of leakage, It is a measure of how much power leaks into the other users. The performance criterion for choosing the beamforming coefficients will be based on maximizing the signal to leakage noise ratio for all users simultaneously. The leakage based criterion decouples the problem of optimization and constitutes a closed form solution. It doesn't require any dimension condition on the number of transmit/receive antennas. It further takes the influence of noise into account while designing the beamforming vectors. The SLNR for user i is defined as

$$\mathrm{SLNR_i}(t) = \frac{||H_i(t)w_i(t)||^2}{M_i\sigma_i^2(t)+\sum_{k=1,k\neq i}^{K}||H_k(t)w_i(t)||^2} \tag{6.42}$$

The signal power received at user i is given by $||H_i U_i(t)||^2$ and the total leakage power from user i to other co-channel user is $\sum_{k=1,k\neq i}^{K}||H_k(t)w_i(t)||^2$.The conventional beamforming schemes maximizes only the received signal strength at the target receiver, but the SLNR is selected such that it balances the received signal strength at the desired receiver and the leakage to other users at same time instant.

$$\sum_{k=1,k\neq i}^{K}\sum_{m=1}^{M_k}|h_m^k(t)w_i(t)|^2 \tag{6.43}$$

The outer summation in above equation represents the sum over the (K-1) co-channel users and the inner summation represents the sum over receiver antennas of users K. It is well known fact that multiple receive antennas provide degrees of freedom that can be used for interference suppression. Thus, more the receive antennas; more will be its interference suppression capability. The effective interference that a receiver can see depends on the channel and on the transmit precoder of the interferer as well as on the receiver structure.

The system shown in Fig.5.1 communicates with K users. The vector S_i is intended for i user which contains the user data as well as pilot symbols with zeros that defines the inactive subcarriers in the system. These symbols will get precoded by w_i such that data vector S_i and the beamforming matix w_i becomes normalized to each other respectively i.e

$$E[s_i s_i^*] = 1\,, Tr[w_i^* w_i] = 1 \qquad (6.44)$$

The normalized instantaneous SNR is given by

$$\gamma = \frac{\vartheta}{M_T d(m,m)} \sum_{k\neq i}^{K} |(G_i)|^2 \gamma_s \qquad (6.45)$$

Here $\gamma_s = E_s/N_0$, E_s is the energy of symbol at the transmitter, $N_0/2$ is the variance of real/imaginary part of AWGN, erfc is the complementary error function, erfc(x)= $\int_x^{\infty} \exp(-t^2)\, dt$.The BER expression for the m^{th} sub-channel can be written as

$$BER_{QAM} = \left(1 - \frac{1}{\sqrt{2^{\beta}}}\right) \sum_{k=0}^{N-1} erfc\left(\sqrt{\frac{1.5\gamma_s \vartheta \sum_{j=1}^{M_T} \sum_{i=1}^{M_R} \sum_{k\neq i}^{K} \left|H_{i,j}\right|^2}{N_T\, d\left(2^{\beta}-1\right) R_0}}\right. \qquad (6.46)$$

BER Expressions can be derived for different coding schemes namely BPSK, QPSK, M-QAM. However, BER for QAM is presented above. We will analyze the results using different modulation schemes as well for different numbers of users for multiple receive antennas and transmit antennas. In Subsequent sections different simulation results are presented and analyze and then some conclusions are drawn.

6.3 Simulation Model

For a comprehensive assessment of multi-antenna techniques, it is mandatory to consider the performance at system level, since many effects of spatial processing, like multi-user decoding, the impact of spatially-color interference, and the benefits of interference management techniques are not tractable at the link level. In this section, we will investigate the performance of MU-MIMO techniques with precoding and different decoding techniques.

Major requirements for the next generation of wireless systems include among others high performance, robustness and adaptability to a wide range of scenarios and terminal classes.

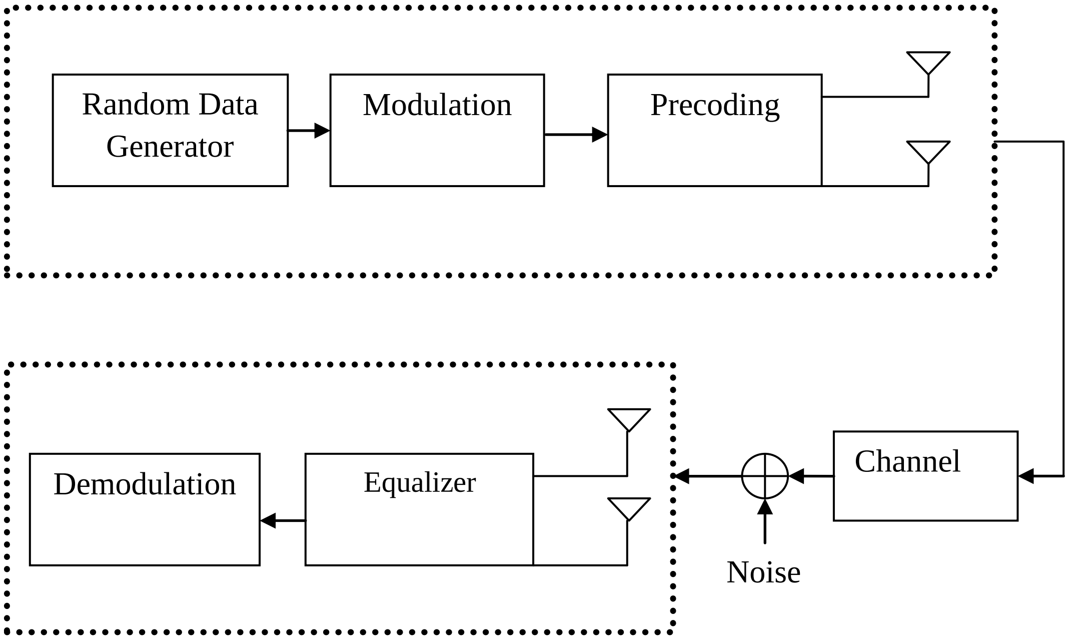

Fig. 6. 2 Matlab Simulation Model

MATLAB simulation model which contains-

- **Random Data Generator-** To generate random binary data, random data generator is used. It generates data serially. Data stream generated by random data generator represents the data information to be transmitted.

- **Modulation-** This block does the modulation on the transmitted data stream. I have used BPSK, QPSK and 16-QAM modulation technique. This block does mapping of data to symbol using constellation.

- **Precoding-** When symbol is mapped accordingly with modulation scheme then the stream is fed to precoding block which format the transmitted signal in such a way that the effect of channel in the transmitted signal get reduced if the transmitter side knows the channel state information.

Fading Channel- Precoded data then pass through the channel and experiences various channel effects.

- **Equalization-** This technique is used independently or in random to improve receive signal quality. Equalization is used at receiver to mitigate the effect of channel on received signal by knowing channel response.

• **Demodulation-** This block does demodulation of the signal output form equalizer block corresponding to the modulation scheme used at the transmitter side.

Some of the goals for the future wireless systems are:

• Improved BER performance with reduced computational complexity

• Improved spectral efficiency and increased user peak data rate

• Increased range or coverage in a cost-efficient manner

• Enhanced interference management

• Adaptability to scenario and channel conditions.

Channel knowledge is typically described with two sorts of measures; channel state information and channel quality indicators (CQI). The term CSI usually refers to knowledge of the complex valued radio channel, while CQI, on the other hand, is rather a real valued measure of the quality of the channel, for example an SINR after receiver processing that may be used to adapt the code rate, modulation order, and spreading at the transmitter. The amount of channel knowledge dictates which methods are applicable and the potential benefits of spatial processing techniques.

In previous chapter, we have introduced several linear and non linear precoding techniques. Non-linear precoding techniques provides enhance system performance and reliability as well as sum channel capacity. However, they have complex architecture in comparison to linear precoding techniques, which makes the linear precoding scheme a favorable choice than the non-linear precoding. But to achieve higher BER, non linear precoding is preferable.

6.4 Simulation Parameters

The parameters that are taken into account of consideration while having simulation process.

Table 6.1 Simulation Parameters

Number of users	**4**
Number of transmitting antennas	**4**
Modulation Scheme	**QPSK**
Precoding schemes	**Channel inversion, regularizsed CI, BD, THP,DPC**

6.5 Simulation Result

6.5.1 Simulation Results with different precoding techniques

In this section, we will focus on the system level performance of both linear and nonlinear decoding techniques. Fig. 6.3 shows BER performance for Zero forcing decoding technique. Table 6.1 shows the simulation parameters used in this simulation. The BER performance of a multiuser MIMO system where either channel inversion or regularized channel inversion can be selected by setting mode=0. The data generated by the random generator with QPSK modulation scheme Fig 6.3 shows that with the use of regularized channel inversion precoding, BER can be achieve10^-2 at SNR of around 20 dB

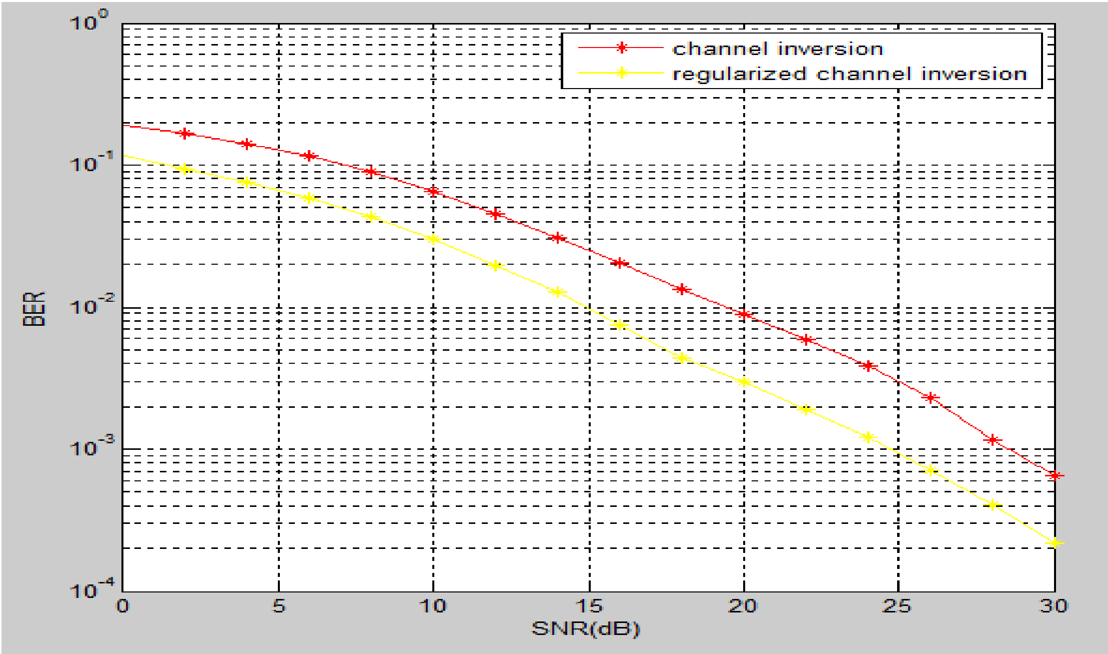

Fig. 6.3 BER analysis for Regularized Channel inversion and channel inversion

In this section, we will focus on the system level performance of both linear and nonlinear decoding techniques. Fig. 6.3 shows BER performance for Zero forcing decoding technique. Table 6.1 shows the simulation parameters used in this simulation. The BER performance of a multiuser MIMO system where either channel inversion or regularized channel inversion can be selected by setting mode=1. The data generated by the random generator with QPSK modulation scheme. Fig 6.4

shows that with the use of regularized channel inversion precoding, BER can be achieved 10^-2 at SNR of around 15dB.

In this section, we will focus on the system level performance of linear precoding. Fig. 6.4 shows BER performance for block diagonalization . Table 6.1 shows the simulation parameters used in this simulation. The BER performance of a multiuser MIMO system N_B = 4, K=2, and N_{M1} =N_{M2}= 2 where the average BER is taken for both users while employing a zero forcing detection at the receiver. The data generated by the random generator with QPSK modulation scheme. Fig 6.3 shows that with the use of BD precoding the analysis shows that it has better performance over the channel inversion and regularized channel inversion with the BER of 10^-2 at SNR of 23 dB

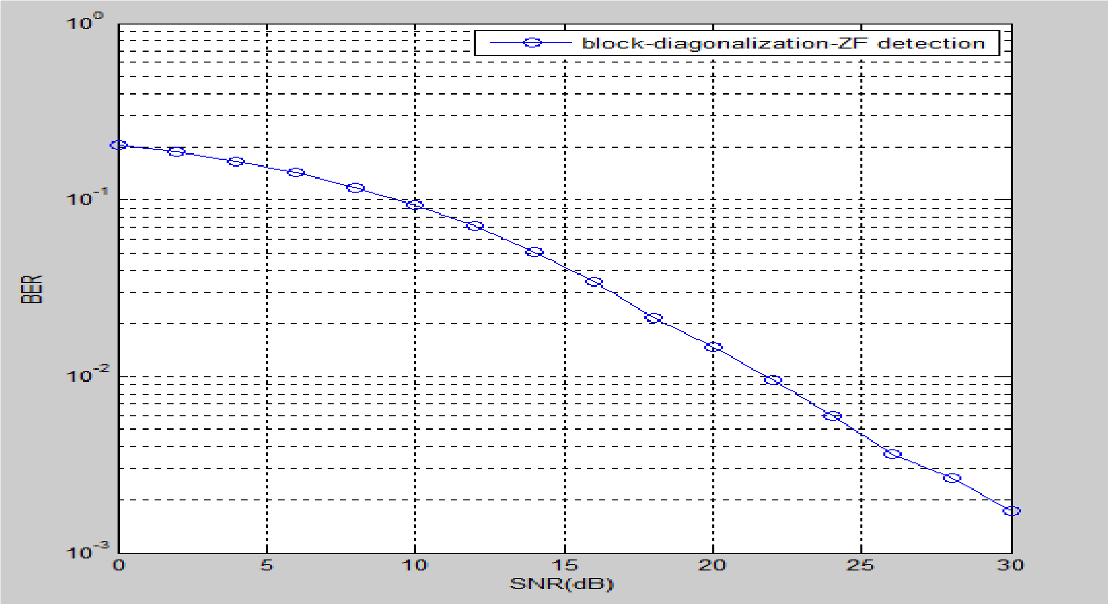

Fig 6.4 BER Analysis of Block diagonalization Precoding

In this section, we will focus on the system level performance of linear precoding. Fig 6.5 shows BER performance for DPC and THP by switching on a mode of mode=0 for DPC and mode=1 for THP. Table 6.1 shows the simulation parameters used in this simulation for NB = 4 and K =10 as depicted in Fig 6.5 where four users are selected out of the ten users by using the criterion. As can be seen in Fig. 6.5, the DPC outperforms the THP. In this comparison, however, transmitted power of DPC is higher than that of THP. Note that the reduced transmit power of THP is attributed to modulo operations in the precoding process.

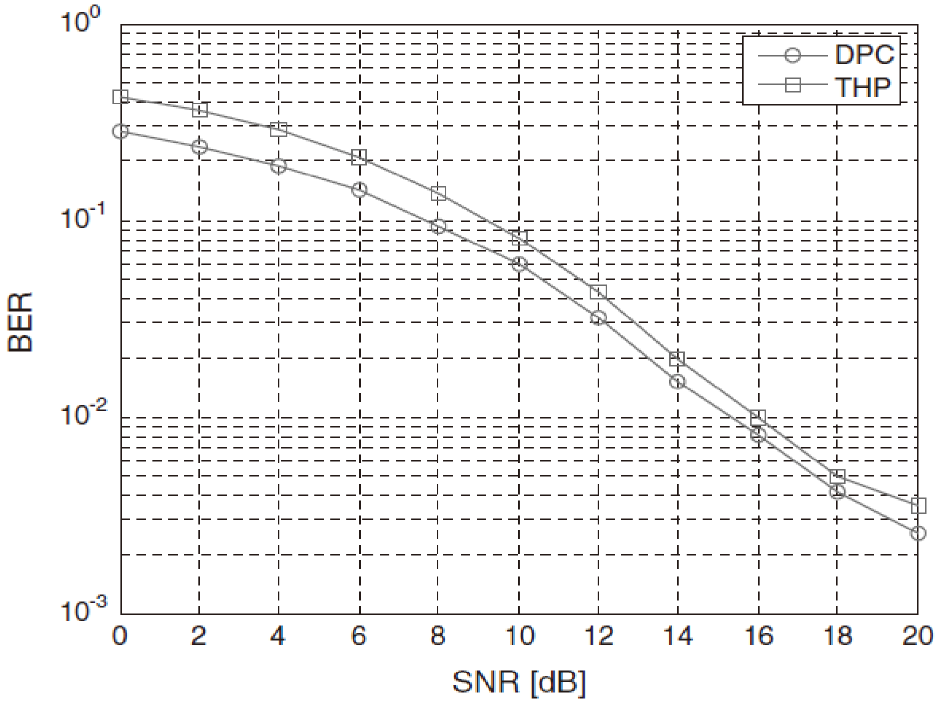

Fig 6.5 BER Analysis of THP and DPC Precoding

Table 6.2 Comparison of Simulation Results

Precoding Technique	BER	SNR
Channel Inversion	**10^-2**	**20**
Regularized Channel Inversion	**10^-2**	**15.7**
Block Diagonalization	**10^-2**	**23**
Dirty Paper Coding	**10^-2**	**15.5**
Tomilson Harashima	**10^-2**	**16**

6.5.2 Simulation Results With Leakage based precoding

Here all the previously mentioned precoding techniques along with the leakage based precoding is discussed for the N_T= 2 and N_i= 1 and K=2 shown in Fig 6.5. Simulations are carried out under TU6 channel model with path delays of [0, 0.2, 0.5, 1.6, 2.3, 5] μsec and average path powers of [-3, 0, -2, -6, -8, -10] dB respectively. It clearly shows in Fig 6.8 that BER plot is monotonically decreasing function of SNR. It approximately decreases to 10^{-3} at SNR of 11dB, 9dB, 8.5dB, 8dB and 7.5dB with dirty paper, BD, VPP, THP and leakage precoding schemes respectively.

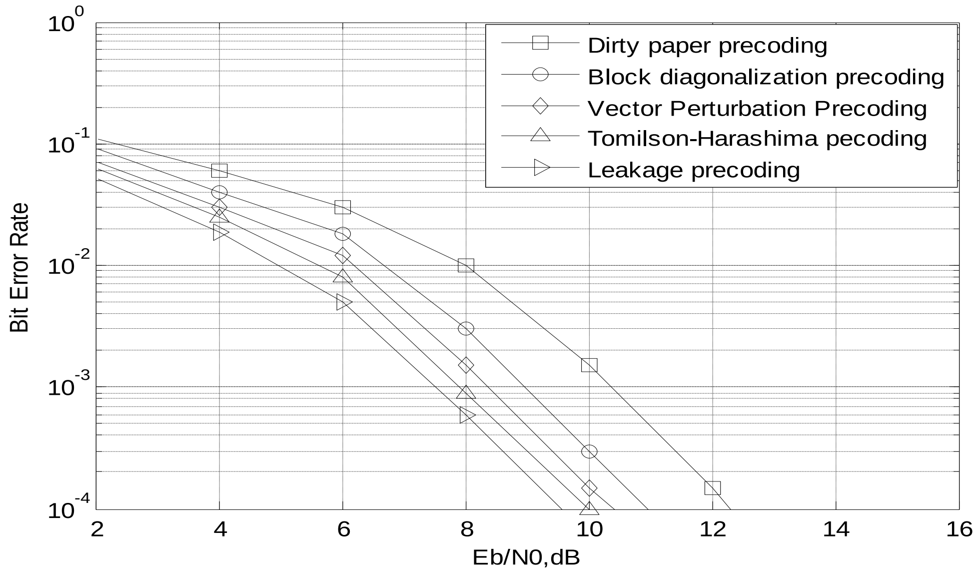

Fig 6.6 BER performance using N_T=2, N_i=1 and K=2

In this section different precoding schemes are compared with leakage precoding In Fig. 6.7 for 4 users. BER decreases to 10^{-3} at SNR of 9dB, 7.5dB, 6.5dB, 5.5dB and 4.5dB with dirty paper, BD, VPP, THP and leakage precoding schemes respectively. Thus, both results are of same pattern and it can be concluded that we always get best results using leakage precoding. This comparison is carried out for N_T=4 N_i=2 and K=2 shown in Fig. 6.7

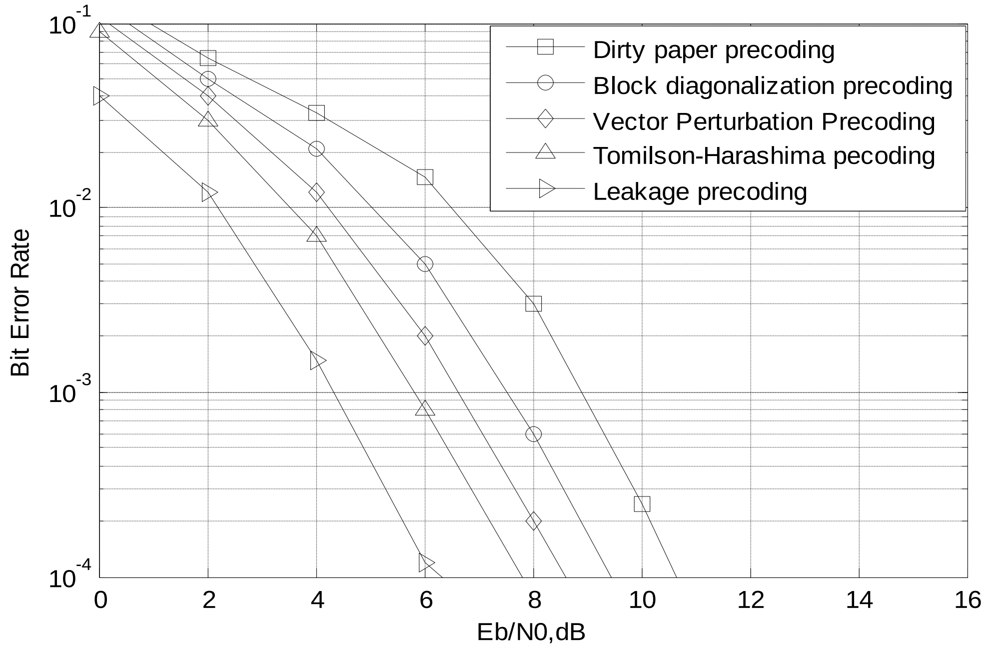

Fig 6.7 BER performance using N_T=4, N_i=2 and K=2

In this section we will analyze the relation of average SNR and the number of user at the transmitting and receiving end. Shown in Fig 6.8 through the analysis, it can be observed that average SNR decreases with increase in number of users and N_T.

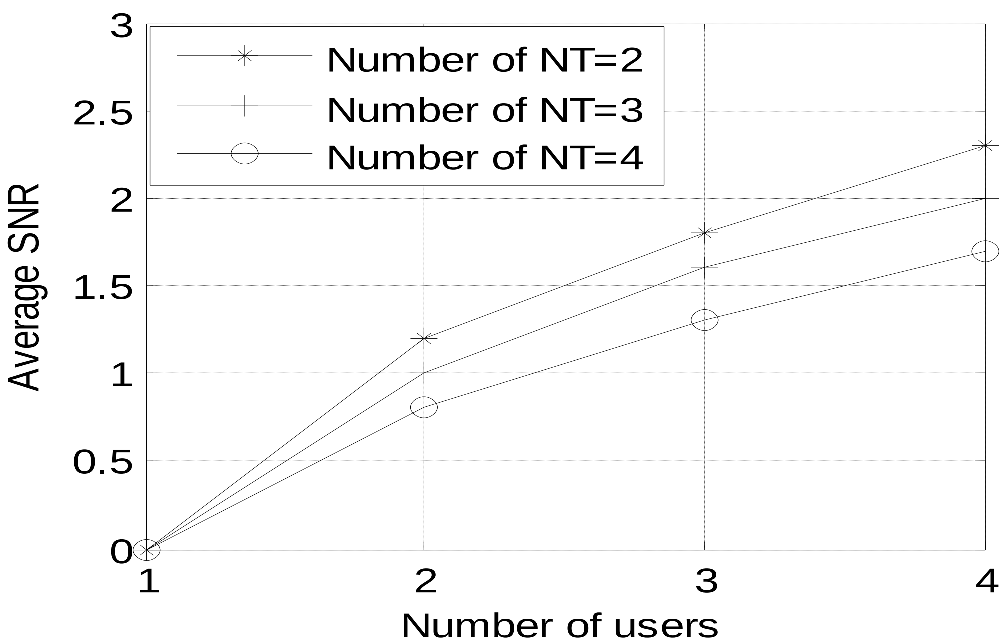

Fig 6.8 Variation of average SNR with K users and N_T

CHAPTER 7

CONCLUSIONS AND FUTURE SCOPE

The goal of this thesis was to study precoding schemes based on the different techniques which are linear and non-linear in nature occurs in the MIMO systems. In this study, various techniques are constructed along with the introduction to the leakage concept. The main issue between the leakage based and rest of the techniques is due to the interference involved in the transmission along with the loss of transmit power that is leaked into other user which leads to degradation in performance. We have Concluded that the BER performance of Leakage based precoding is better than other precoding techniques that are discussed in this thesis in terms of different configuration of antennas at transmitter and receiver side. We have also analyze the processing of the leakage based precoding when it is superimposes on the special transmission channel that is X-channel. We concluded theoretically that the MU-MIMO is inferior to the SU-MIMO case as the interference likely to be encounter due to multi-user.

Furthermore, approximate BER expressions are derived for most of the precoding techniques for generalized case of antennas configurations.

In this thesis, the performance in terms of processing time with respect to the SNR is analyzed for the leakage based precoding technique when it is applied to the X-channel. Further the BER performance can be extended for the leakage based technique in X-channel.

LIST OF PUBLICATIONS

Aditi Agnihotri, Bhasker Gupta “Performance Evaluation of Linear/Non-Linear Precoding Schemes for Downlink Multi-User MIMO Systems ” IEEE International Conference on Industrial Instrumentation and Control, May,28-May,30,2015, COEP,Pune.

REFERENCES

[1] J. Winters, “On the capacity of radio communication systems with diversity in a rayleigh fading environment,” IEEE Journal of Selected Areas inCommunications, vol. 5, pp. 871–878, June 1987

[2] E. Telatar, “Capacity of multi-antenna Gaussian channels,”ATT Bell Technical Memorandum, 1995.

[3] G.J. Foschini, “Layered space-time architecture for wireless communication infading environments when using multi-element antennas,” Bell Labs Tech. J.,1996.

[4] S.M. Alamouti, “A simple transmit diversity scheme for wireless communications,” IEEE Journal of Selected Areas in Communication, vol. 16, pp. 1451–1458, October 1998.

[5] B. Hassibi and B.M. Hochwald, “High-rate codes that are linear in space and time,”IEEE Trans. on Inf. Theory, vol. 48, no. 7, pp. 1804–1824, July 2002.

[6] P.W. Wolniansky, G.J Foschini, G.D. Golden, and R.A. Valenzuela, “V-BLAST:An architecture for realizing very high data rates over the rich-scattering wirelesschannel,” in Proc. INTERNATIONAL SYMPOSIUM ON SIGNALS, SYSTEMS AND ELECTRONICS 98, September 1998.

[7] H. Sampath, P. Stoica, and A. Paulraj, “Generalized linear precoder and decoder design for MIMO channels using the weighted MMSE criterion,” IEEE Trans. On Comm., vol. 49, no. 12, pp. 2198–2206, December 2001.

[8] Scaglione, P. Stoica, S. Barbarossa, G. Giannakis, and H. Sampath, “Optimal designs for space-time linear precoders and decoders,” IEEE Trans. on SignalProc.,vol. 50, no. 5, pp. 1051–1064, May 2002.

[9] A.Paulraj, R. Nabar, and D. Gore, Introduction to Space-Time Wireless Communications, Cambridge University Press, 2003.

[10] W. Yu, W. Rhee, S. Boyd, and J. Cioffi, “Iterative water-filling for vector multiple access channels,” in Proc. IEEE Int. Symp. Inf. Theory, (ISIT) June2001.

[11] Vishwanath, N. Jindal, and A. Goldsmith, “On the capacity of multiple input multiple output broadcast channels,” in Proc. of the IEEE international conference on communications ICC, New York, NY, April 2002.

[12] W. Yu, W. Rhee, S. Boyd, and J. Cioffi, "Iterative water-filling for Gaussian vector multiple access channels," IEEE Trans. on Inf. Theory, vol. 50, pp 145-152, January 2004.

[13] D.Gesbert, M.Shafi,D.Shiu,"From theory to practice :an overview of MIMO Space-time coded wireless systems"in IEEE journal on selected areas in communications,Vol. 21,No.3, pp. 281-301, April 2003

[14] Spencer,Q.H "An Introduction to the multi-user MIMO downlink" IEEE communication magazine,pp.60-67,oct 2004.

[15] APaulraj "An Overview of MIMO Communications—A Key to Gigabit Wireless" Proc.Of the IEEE, Vol. 92, No. 2,pp,198-216, Feb 2004.

[16] Barry, John R., Edward A. Lee, and David G. Messerschmitt, "*Digital communications*", Springer, 2004.

[17] Y. Cho, J. Kim,"MIMO-OFDM WIRELESS COMMUNICATIONS WITH MATLAB"IEEE Press, 2008

[18] Sklar B., "*Digital communications*", Prentice Hall PTR, New Jersey, vol. 1099, 2001.

[19] M. Schubert and H. Boche, "Solution of the Multiuser Downlink Beamforming Problem with Individual SINR Constraints," *IEEE Trans. Vehic. Tech.*, vol. 53, Jan. 2004, pp. 18–28.

[20] Q. H. Spencer, A. L. Swindlehurst, and M. Haardt, "Zero-Forcing Methods forDownlink Spatial Multiplexing in Multi-User MIMO Channels," *IEEE Trans.Sig.Proc.*, vol. 52, Feb. 2004.

[21] M. Costa, "Writing on Dirty Paper," IEEE Trans. Info.Theory, vol. 29, May 1983, pp. 439–41.

[22] M. Tomlinson, "New automatic equaliser employing modulo arithmetic", Electronics letters, vol. 7, no. 5, 138–139, 1971.

[23] H. Harashima and H. Miyakawa, "Matched-transmission technique for channels with intersymbol interference", IEEE Transactions on Communications, vol. 20, no. 4, 774–780, 1972.

[24] R. Fischer, C. Windpassinger, A. Lampe, and J. Huber, "Space-time transmission using Tomlinson-Harashima precoding", ITG FACHBERICHT,pp. 139–148, 2002.

[25] J. Proakis, Digital communications, vol. 1221, McGraw-hill, 1987.

[26] M. Joham and W. Utschick, “Ordered spatial Tomlinson Harashima precoding”, Smart Antennas-State-of-the-Art, 2006.

[27] M. Joham, J. Brehmer, and W. Utschick, “MMSE approaches to multiuser spatio-temporal Tomlinson-Harashima precoding”, ITG FACHBERICHT, pp. 387–394, 2004.

[28] B. Hochwald, C. Peel, and A. Swindlehurst, “A vector-perturbation technique for near-capacity multiantenna multiuser communication- Part II: Perturbation”, IEEE Transactions on Communications, vol. 53, no. 3, 537–544, 2005.

[29] D. Schmidt, M. Joham, and W. Utschick, “Minimum mean square error vector precoding”, in IEEE 16th International Symposium on Personal, Indoor and Mobile Radio Communications, vol. 1, pp. 107– 111, 2005.

[30] E. Agrell, T. Eriksson, A. Vardy, and K. Zeger, “Closest point search in lattices”, IEEE Transactions on Information Theory, vol. 48, no. 8,2201 2214, 2002.

[31] X. Shao, J. Yuan, and P. Rapajic, “Precoder design for MIMO broadcastchannels”, in IEEE International Conference on Communications(ICC), vol. 2, pp. 788–794, 2005.

[32] A. Bourdoux and N. Khaled, “Joint TX-RX optimisation for MIMOSDMA based on a null-space constraint,” in Proc. IEEE 56th Vehicular Technology Conference, Vancouver, Canada, Sept. 2002, pp. 171–174.

[33] Q. H. Spencer, A. L. Swindlehurst, and M. Haardt, “Zero-forcing methods for downlink spatial multiplexing in multi-user MIMO channels,” IEEE Trans. Signal Processing, vol. 52, pp. 461–471, Feb. 2004.

[34] M. Bengtsson, “A pragmatic approach to multi-user spatial multiplexing,” in Proc. IEEE Sensor Array and Multichannel Signal Processing Workshop, Rosslyn, VA, Aug. 2002, pp. 130–134.

[35] R. Chen, J. G. Andrews, and R. W. Heath, “Multiuser space-time block coded MIMO system with unitary downlink precoding,” in Proc. IEEE International Conference on Communications, Paris, France, June 2004, pp. 2689–2693.

[36] R. W. Heath, M. Airy, and A. J. Paulraj, “Multiuser diversity for mimo wireless systems with linear receivers,” in Proc. Thirty-Fifth Asilomar Conference on Signals, Systems, and Computers, vol. 2, Philadelphia, PA, Nov. 2001, pp. 1194–1199.

[37] T. Yoo and A. Goldsmith, “Optimality of zero-forcing beamforming with multiuser diversity,” in Proc. IEEE International Conference on Communications, Seoul, Korea, May 2005

[38] A. Tarighat, M. Sadek, and A. H. Sayed, “A multi user beamforming scheme for downlink MIMO channels based on maximizing signal-toleakage ratios,” in Proc. IEEE International Conference on Acoustics, Speech, and Signal Processing, vol. 3, Philadelphia, PA, 2005, pp. 1129– 1132.

[39] M. Sadek, A. Tarighat, and A. H. Sayed, “Active antenna selection in multi-user MIMO communications,” IEEE Trans. Signal Processing, vol. 55, no. 4, pp. 1498-1510, April 2007.

[40] K. Wong, R. Cheng, K. B. Letaeif, and R. D. Murch, “Adaptive antennas at the mobile and base stations in an OFDM/TDMA system,” IEEE Trans. Commun., vol.49, pp. 195–206, Jan. 2001.

[41] M. Schubert and H. Boche, “Solution of the multiuser downlink beamforming problem with individual SINR constraints,” IEEE Trans. Veh. Technol., vol. 53, no. 1, pp. 18–28, Jan. 2004.

[42] V. Cadambe and S. Jafar, “Interference alignment and the degrees of freedom of the K user interference channel,” *IEEE Trans. Inform.Theory*, vol. 54, pp. 3425–3441, Aug. 2008.

[43] S. N. Diggavi and T. M. Cover, “The worst additive noise under a covariance constraint,” *IEEE Trans. Inform. Theory*, vol. 47, pp. 3072–3081, Jul. 2001.

[44] L. Zheng and D. Tse, “Diversity and multiplexing : A fundamentaltradeoff in multiple-antenna channels,” vol. 49, pp. 1073–1096, May2003

[45] G. Bresler and D. Tse, “The two-user Gaussian interference channel: A deterministic view,” *European Trans. Telecommunications*, vol. 19, pp. 333–354, Jun. 2008

[46] S. Jafar and S. Shamai, “Degrees of freedom region for the mimo X channel,” *IEEE Trans. Inform. Theory*, vol. 54, pp. 151–170, Jan. 2008.

[47] M. Maddah-Ali, A. Motahari, and A. Khandani, “Communication over mimo X channels: Interference alignment, decomposition, and performance analysis,” *IEEE Trans. Inform. Theory*, vol. 54, pp. 3457–3470,Aug. 2008.

[48] V. Cadambe and S. Jafar, “Degrees of freedom of wireless X networks,”*arXiv:0711.2824*, Nov 2007.

[49] V. Cadambe and S. Jafar, “Interference alignment and the degrees of freedom of the K user interference channel,” *IEEE Trans. Inform. Theory*, vol. 54, pp. 3425–3441, Aug. 2008.

[50] Parneeth KM., S.K. Bhashyan“MIMO Gaussian X-channel: Noisy Interference Regime” IEEECommunication letters, vol.18,no.8,pp.1295 1298,Aug.2014