Implementation of Wheel Chair Using TouchScreen

Project Report submitted in partial fulfilment of the requirement for the degree of

Bachelor of Technology

in

Electronics and Communication Engineering

under the Supervision of

Dr. Neeru Sharma

Rohit Sharma	**101051**
Manish Choudhary	**101052**
Abhishek Dogra	**101059**

Jaypee University of Information and Technology Waknaghat , Solan–173234, Himachal Pradesh

Certificate

This is to certify that project report entitled " **Implementation Of Wheelchair Using Touch Screen**", submitted by Rohit Sharma, Manish Choudhary, Abhishek Dogra in partial fulfillment for the award of degree of Bachelor of Technology in Electronics and Communication Engineering to Jaypee University of Information Technology, Waknaghat, Solan has been carried out under my supervision.

This work has not been submitted partially or fully to any other University or Institute for the award of this or any other degree or diploma.

Date: 27.5.14

NSharma

Dr. Neeru Sharma

Assistant Professor

Acknowledgement

One of the most wonderful aspect of writing an acknowledgement is the opportunity that the we have to thank some people and organizations whose names might not appear in the developer lists.

First and foremost we would like to express our heartfelt thanks to our project guide and mentor **Dr.Neeru Sharma,** Assistant Professor, Dept. of Electronics and Communication.

Her thinking and straight forward attitude have inspired us to complete this project under stiff time limits. We would also like to thank Professor **Dr.Sunil Bhooshan,**,Head of the Department, Electronics and Communication, JUIT, Waknaghat for his sincere devotion to impart us with the best of knowledge and skills available. Also, we would like to express our thanks to laboratory Assistant Dept.of ECE, Mr. Mohan who has supported and encouraged our efforts which have been instrumental in giving the project its final shape. Along with that we would like to express our thanks to all the authors and publishers for bringing out such great books on the subject.

Date: 27/5/14

Rohit Sharma (101051)

Manish Choudhary (101052)

Abhishek Dogra (101059)

Contents

S. No.

Page

List of Figures

Abstract

A touchscreen is a electronic visual display that can detect the presence and location of touch within the display area. The term generally refers to a touch or contact to the display of a device by the finger or hand. The ability to interact physically with what is shown on a display (form of direct manipulation) typically indicates the presence of a touch screen. The touch screen has two main attributes. It enables one to interact with what is displayed directly on the screen , where it is displayed , rather than indirectly with a mouse or touchpad . It lets one do so without requiring any intermediate device , again, such as a stylus that needs to be held in the hand. This technology is used because it enable people to use computers instantly, without any training whatsoever. Touchscreens have eliminated keyboards which were less comfortable in use. Touchscreen provide fast access to any and all types of digital media, with no text-bound interface getting in the way and another important factor is that, it ensures that no space on the desktop or elsewhere is wasted, as the input device is completely integrated in to the monitors. Today a large share of population is pc literate , yet the touchscreens have been adopted by computer users of all abilities because it is simple, fast, innovative. In future there would be no use of mouse and keyboard as they would have been replaced by touchscreens and it is a developing technology. The development of multipoint touchscreen facilitated the tracking of more fingers than one finger on the screen thus the operations that require more than one fingers are also possible. These devices also allow multiple users to interact with the touchscreen simultaneously and with the growing field of touchscreen the marginal cost of this technology is decreasing.

Rohit

Manish

Abhishek

Signature of Students

NSharma

Signature of Supervisor

Name Neeru Sharma

Date 27.5.14

Chapter 1

Introduction

1.1 Introduction to Touchscreen

Initially Wheelchair was operated manually with the person sitting on it and has to move the wheelchair with his /her hands , then as the time changed technology increased and then came the Wheelchair which was driven by motors and was controlled by a joystick.

Now we are making a Wheelchair which is more advance in technology and it is controlled by a simple finger touch .A dummy wheelchair is controlled by resistive touch screen.

Touchscreen will have 4 control options(left, right, forward, backward), which can be operated by putting a little pressure on the respective control. Portable DC power supply is supplied to both dummy wheelchair and touchscreen.

Dummy wheelchair will have 2 DC motors that will move the wheelchair and controls its direction. As the user will touch the touchscreen a signal will go to the microcontroller and accordingly the wheelchair will move. We are using resistive touchscreen because it is not easily damaged and is cost effective.

A touchscreen is an electronic visual display that the user can control through simple or multi-touch gestures by touching the screen with a special stylus/pen and-or one or more fingers. Some touchscreens use an ordinary or specially coated gloves to work while others use a special stylus/pen only. The touchscreen enables the user to interact directly with what is displayed, rather than using a mouse, touchpad, or any other intermediate devices.

Resistive touchscreen panel is composed of electrically conductive layers separated by narrow gap. And when an object presses down on the panel's outer surface the conductive layers get connected and complete the circuit. Controller then converts the electrical signal into digital X & Y coordinate.

Touchscreens are common in devices such as game consoles, all-in-one computers, tablet computers, and smartphones. They can also be attached to computers or, as terminals, to networks. They also play a prominent role in the design of digital appliances such as personal digital assistants (PDAs), satellite navigation devices, mobile phones, and video games and some books (Electronic books).

1.2 Technologies

Majorly there are two types of touchscreens used in the market: 1.Resistive

2.Capacitive

1.2.1Resistive touchscreen

A resistive touchscreen panel comprises several layers, the most important of which are two thin, transparent electrically-resistive layers separated by a thin space. These layers face each other with a thin gap between. The top screen (the screen that is touched) has a coating on the underside surface of the screen. Just beneath it is a similar resistive layer on top of its substrate. One layer has conductive connections along its sides, the other along top and bottom. A voltage is applied to one layer, and sensed by the other. When an object, such as a fingertip or stylus tip, presses down onto the outer surface, the two layers touch to become connected at that point. The panel then behaves as a pair of voltage dividers, one axis at a time. By rapidly switching between each layer, the position of a pressure on the screen can be read.

Resistive 4- and 5-wire touch systems belong to the most popular and most common touch screen technologies. Their market share is about 75%, mainly due to their low costs and simple interface electronics. Resistive System can be found in various mobile applications including PDAs and Smartphones.

AVR microcontrollers are excellent in this type of application due their analog features combined with low power modes, required in e.g. portable battery powered applications. As resistive touchscreens are very cost effective and they cannot be easily damaged so it is used widely and it works by only applying a little pressure on it so it is relatively easier to use than any other type of touchscreen and so it is easier to handle.

I. Theory of operation - analog resistive touch screens

To build a resistive touchscreen , the key goals are to recognize one or more fingers touching a display, to interpret the command that this represents, and to communicate the command to the appropriate application. Usually a resistive touch screen consists of at least three layers: A flexible membrane made from PET film is suspended over a rigid substrate made from glass or acryl . Both surfaces are coated with a transparent conductive film like ITO (Indium tin oxide). The conductive ITO layers are kept apart by an insulting spacer along the edges, and by spacer dots on the inner surface of the two ITO layers.

In this way there will be no electrical connection unless pressure is applied to the topsheet (Polyester film).

.

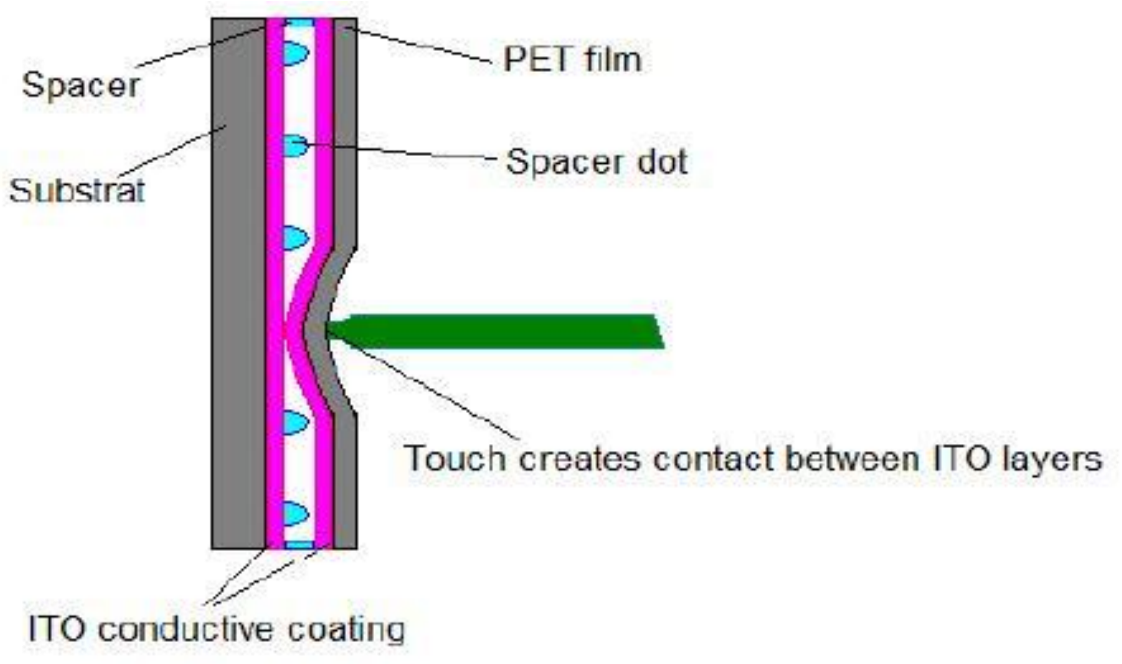

Figure 1.1 Resistive touch screens

4-wire touch screens use a single pair of electrodes on each ITO layer . The electrode in the topsheet and substrate are perpendicular to each other. The electrodes are connected to the touch screen controller through a 4-wire flex cable. The 4 wires are referred as X+ (left), X- (right), Y+ (top) and Y- (bottom). These 4 wires are used to give the coordinates on the touchscreen and accordingly particular operation is performed. Whenever user applies pressure on it , the indium tin oxide layers have a contact and circuit completes and operation is performed.

An advantage of the 4-wire touch screens is that it is possible to determine the touch pressure by measuring the contact resistance (R_{Touch}) between the two ITO layers. R_{Touch} decreases as the touch pressure (or the size of the depressed area) increases. This characteristic can be useful in applications in which it is not only required to detect where the pressure is applied, but also the type of pressure (area and force).

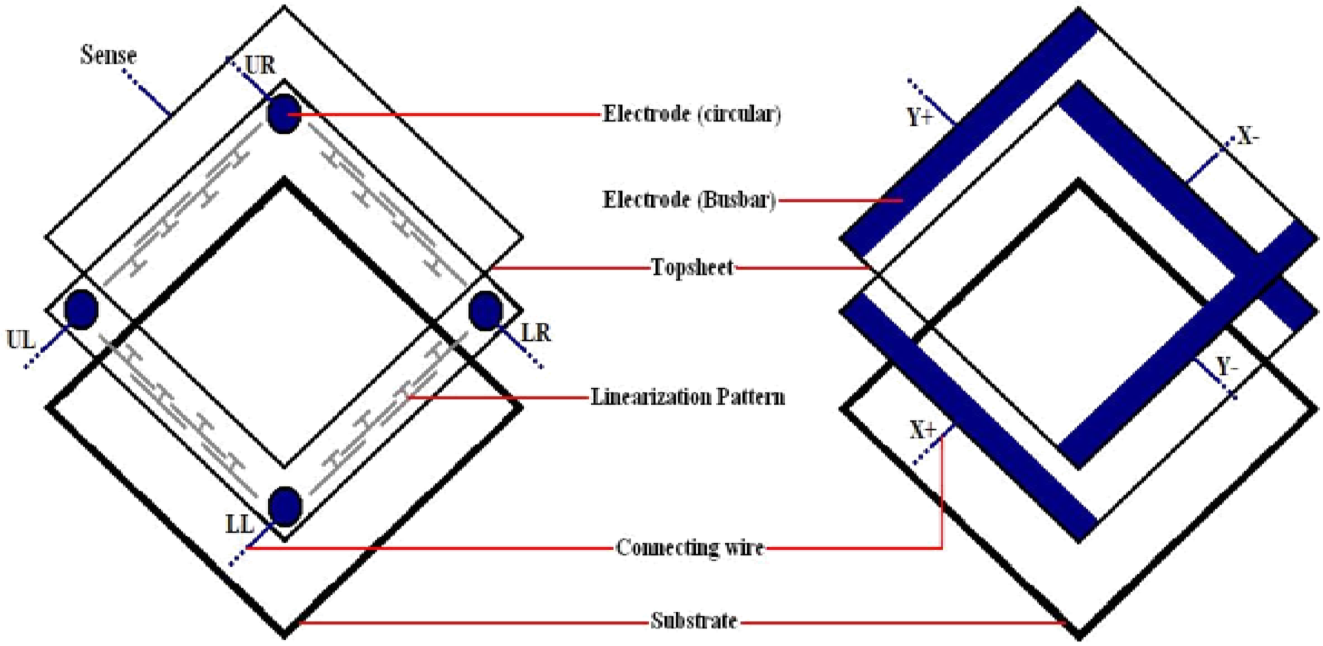

Figure 1.2 Electrodes in 4- (right figure) and 5- wire (left figure) touch screens.

5-wire touch screens have circular electrodes. Since all of them reside in the substrate ITO(indium tin oxide) there is a need for linearization pattern (conductive) to make an applied voltage gradient uniform.

4 wires connect to the electrodes these are referred to as UL (Upper Left), UR (Upper Right), LL (Lower Left), LR (Lower Right). The fifth wire is used for sensing the electrode voltage and is referred to as the ―sense‖ wire. The sense wire is embedded in the topsheet. The advantage of the

5-wire touch screen type is that the ITO coating on the topsheet is not required to be perfect. This means that physical wearing of the 5-wire touch screens is less critical than for 4-wire touch screens. 5 wire resistive touch screen features unrivaled accuracy, reliability, superior light transmission, highest touch point density, touch input variety. Impervious to environmental conditions such as liquid splashes, contamination. The lifetime is up to 35 million finger touches, which is good as compared to other touchscreens.

The point of contact ―divides‖ each layer in a series resistor network with two resistors , and a connecting resistor between the two layers. By measuring the voltage at this point the user gets information about the position of the contact point orthogonal to the voltage gradient. To get a complete set of coordinates, the voltage gradient must be applied once in vertical and then in

horizontal direction: first a supply voltage must be applied to one layer and a measurement of the voltage across the other layer is performed, next the supply is instead connected to the other layer and the opposite layer voltage is measured. In stand-by mode one of the lines are connected to a level triggered interrupt in order to detect touch activity.

To get a complete set of coordinates, the voltage gradient is applied on the substrate layer once in horizontal direction to determine the Y coordinate and once in vertical direction to determine the X coordinate. In both cases the topsheet layer is used to do a high-impedance measurement after the sensing voltage has settled. In standbymode the fifth wire (sense) is connected to a level triggered interrupt in order to detect touch activity.

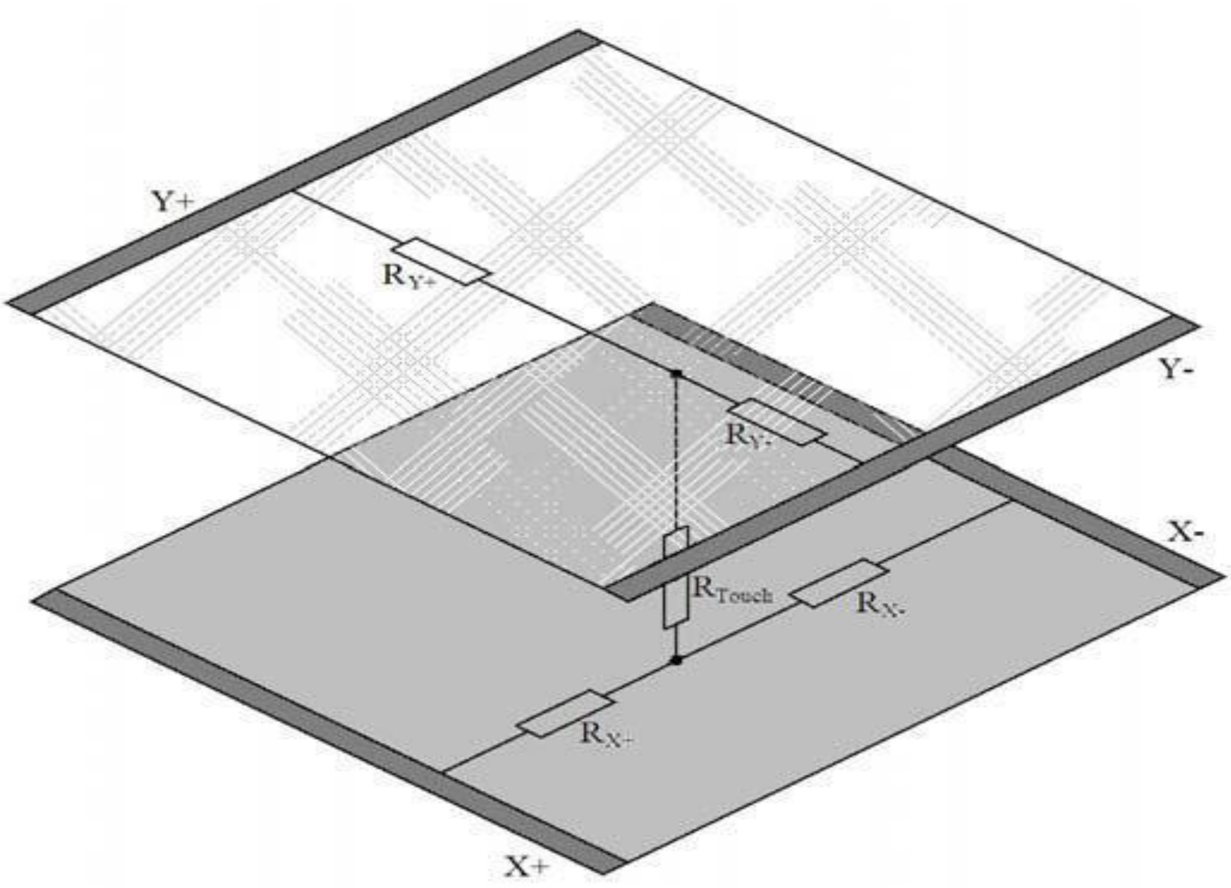

Figure 1.3. Schematic of a 4-wire touch screen when pressure is applied.

The point of contact ―divides‖ each layer in a series resistor network with two resistors , and a connecting resistor between the two layers. By measuring the voltage at this point the user gets information about the position of the contact point orthogonal to the voltage gradient. To get a complete set of coordinates, the voltage gradient must be applied once in vertical and then in horizontal direction: first a supply voltage must be applied to one layer and a measurement of the voltage across the other layer is performed, next the supply is instead connected to the other layer and the opposite layer voltage is measured. In stand-by mode one of the lines are connected to a level triggered interrupt in order to detect touch activity.

II. Touch bouncing

Resistive touch screens, especially the inexpensive ones, are bouncy and susceptible to glitches, and therefore filtering of the determined coordinates is necessary. Though external components can be used to implement analog filtering, this will add cost to the design. A better way to achieve correct coordinates is to run a digital filter in software: a median filter is a good choice, as it eliminates incorrect measurements.

A digital filter, however, implies several measurements to get a single X or Y coordinate pair. It is also possible to introduce corrective actions by defining conditions that needs to be fulfilled to accept a new set of coordinates:

III. Requirements for a touch screen controller

To operate a 4-wire touch screen, there are several requirements regarding the controller.

- **ADC**

An A/D converter with a resolution of 10 bits and the absolute inaccuracy far under the linearity error of the touch screen (1,5%-3%) is required for the conversion of the analog values into digital values.

When considering the minimum detection time for applied pressure on the screen and changes in coordinates, the conversion time of the ADC must be considered. In an application only monitoring clicks, 70 points per seconds is typically needed. For detection of motion, e.g. handwriting, one should calculate approximately 200 points per second - taking into account that multiple measurements are included to compass the correct point . Also, the CPU must be able to process the ADC readings with sufficient computational accuracy to not reduce the detection rate.

- **I/O pins**

The pins driving the touch screen must be able to sink and source in the range of 5-25mA (depending on the value of the ITO resistance and the voltage used). This means that 4 digital IO pins and two analog inputs (ADC channels) are required. If the pins can be configured as both analog input and digital IO, 4 pins are sufficient for a 4-wire touch screen controller. A 5-wire touch screen controller just needs one analog input line – to measure the sense line.

- **Timer**

A timer is used as a scheduler for different purposes. Since the proposed method is interrupt driven, there is no need for additional delays, e.g. in order to debounce the touch screen. The timer can also be used to trigger the ADC and set the I/O pins in the correct order immediately before a measurement starts. In this way, the controller powers the touch screen only for a minimum of time. Furthermore, a timer can be used to create a timeout function, which sets the controller into sleep mode when no activity is detected on the touch screen for a certain amount of time.

- **Activity detection**

As touch screens are often used in portable applications, the power consumption of the touch screen controller should be taken into account. One way to reduce the power consumption is to let the touch screen controller enter low power sleep modes (―standby‖) when no activity is detected on the touch screen.

To enable the use of standby operation, a level-change detection should be implemented using a pin change interrupt combined with an internal pull-up. This allows the touch screen controller to enter low power mode while waiting for activity on the touch screen, and wake up when the pin change is triggered.

- **Connecting the touch screen to the AVR**

The implementation example uses the ATmega8 as touch screen controller. It shows how to connect the ATmega8 to respectively a 5-wire and a 4-wire touch screen. In order to drive a 5-wire touch screen one have to connect the sense line to an ADC channel input of the AVR. A 4-wire touch screen needs two ADC input channels (X- and Y-). The remaining lines should be connected to any I/Os, but preferably on the same port. As voltage reference it is recommended to use AVCC with an external capacitor on the AREF pin. To minimize noise signals , it is common to add capacitors from the touch screen drivers to ground forming a low-pass filter (typical value

0.01µF), but you have to consider that this step will increase the time constant of your system. The ability to accurately point on the screen itself is also advancing with the emerging graphics tablet/screen hybrid

Now it can be seen from the figure that all the four wires of touchscreen are connected to the ADC(analog to digital converter) pins because all the input which is given by the user is analog in nature and that analog signal is to be converted to digital signal. So in this microcontroller we already have ADC pins, so all the pins are connected to these pins. We have used capacitors to remove the noise . four wire resistive touchscreen is easy to operate and is very economical and all these pins are 8-bit bidirectional pins in atmega8 micocontroller. So pins can be used both as input as well as ouput and we have taken output from port D, which is connected to IC L293dne which help us to drive the motors .Port D pins are connected to the input pins of motor driving IC.

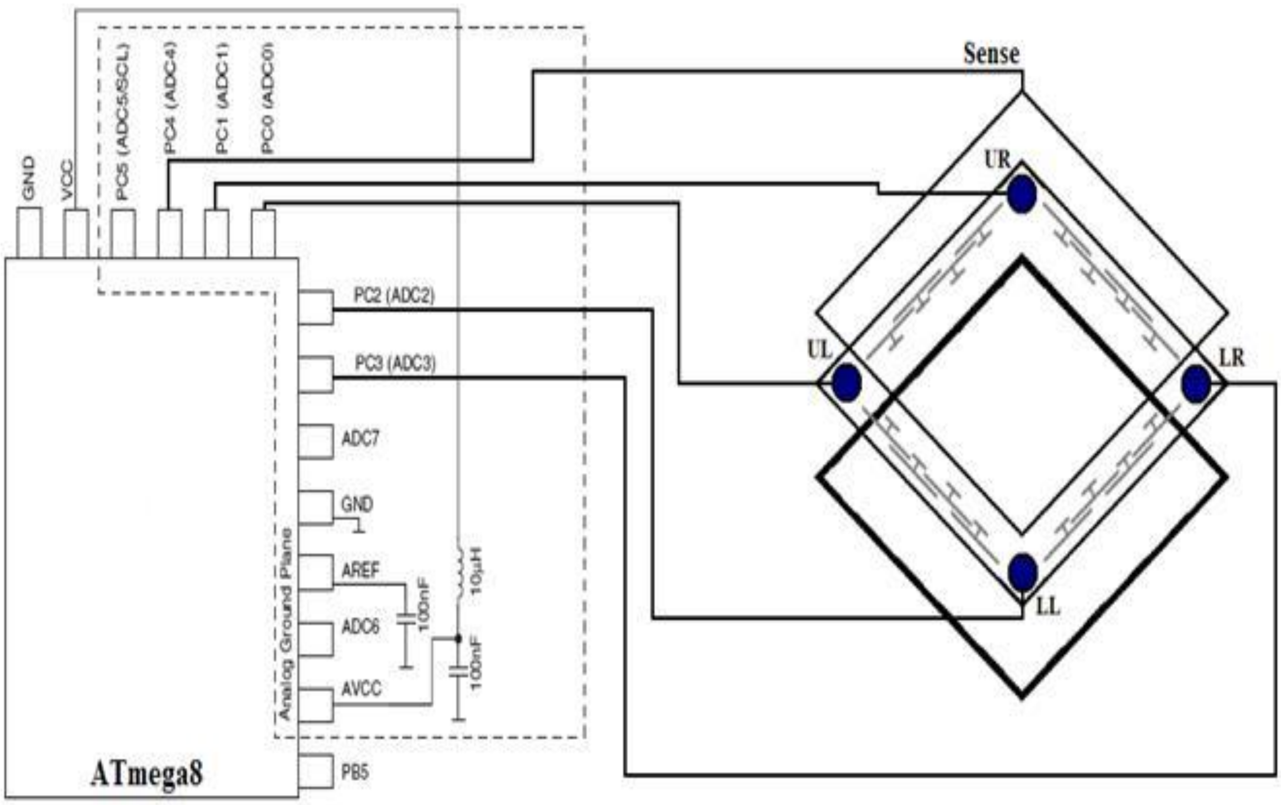

Figure 1.4 Design suggestion for 5-wire touch screens.

Explanation

For a five wire touchscreen we have four electrodes (upper right, upper right, lower left, lower right) and we have four wires and fifth wire is sensing wire. All the wires are connected to port C pins and Atmega8 has inbuilt ADC pins and all the four wires are connected to these ADC pins. In this we have connected both Vcc and AVcc pins to five volts and we have connected capacitor to remove the noise.

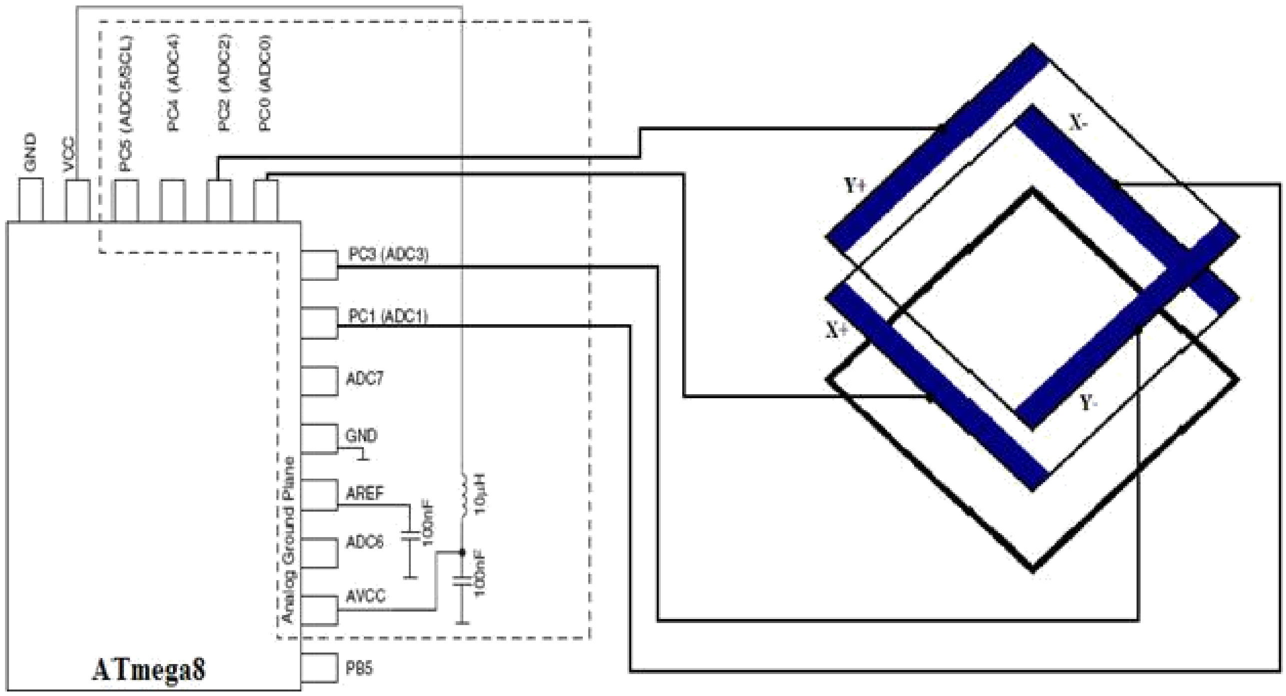

Figure 1.5 4-wire touch screen with connection.

IV. Examples of Resistive Touchscreen

V. Advantages and Disadvantages

- Advantages of Resistive Touchscreens
  - Lower cost as resistive touchscreens relatively cost cheaper.
  - Can be operated with any pointing devices like stylus and nail.
  - Good for handwriting recognition system with a stylus.
  - More accurate than capacitive touchscreen.
  - Doesn’t get damanged easily when dropped.

- Disadvantages of resistive touchscreens
  - Not as responsive as capacitive touchscreens.
  - Multi touch support not available yet.
  - User has to apply pressure for it to work.
  - Visibility reduces in direct sunlight due to reflection.

1.2.2 Capacitive Touchscreen

A capacitive touchscreen panel consists of an insulator such as glass, coated with a transparent conductor such as indium tin oxide(ITO). As the human body is also an electrical conductor, touching the surface of the screen results in a distortion of the screen's electrostatic field, measurable as a change in capacitance. Different technologies may be used to determine the location of the touch. The location is then sent to the controller for processing.

Unlike a resistive touchscreen, one cannot use a capacitive touchscreen through most types of electrically insulating material, such as gloves. This disadvantage especially affects usability in consumer electronics, such as touch tablet PCs and capacitive smartphones in cold weather. It can be overcome with a special capacitive stylus, or a special-application glove with an embroidered patch of conductive thread passing through it and contacting the user's fingertip.

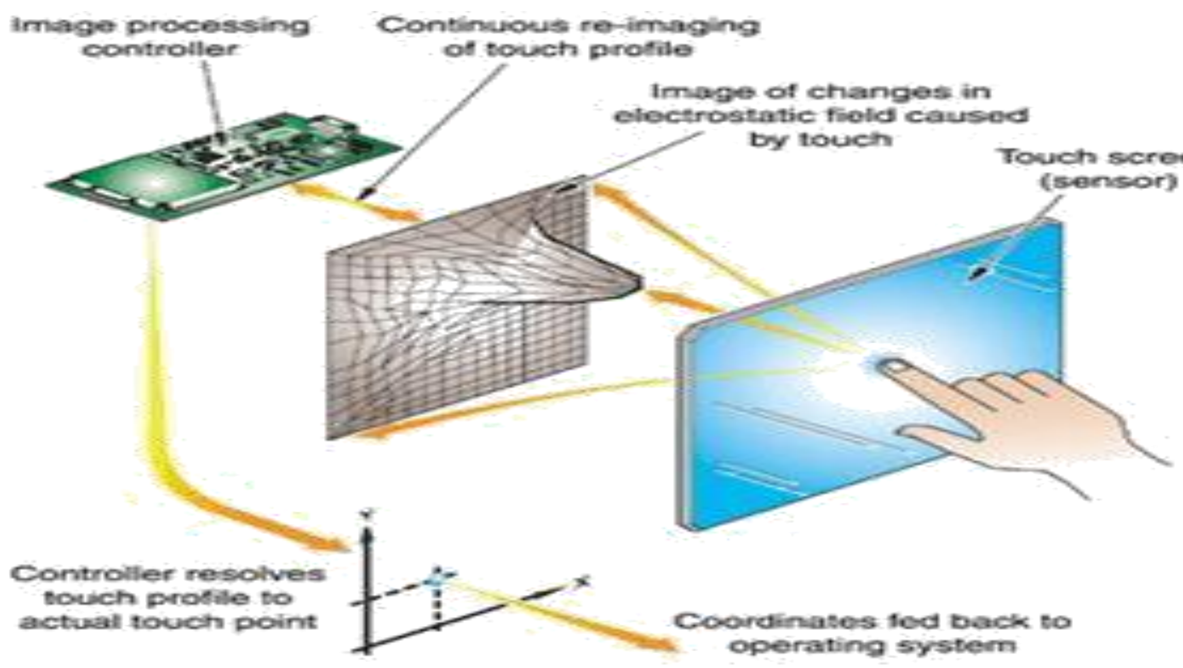

Figure 1.7 Capacitive Touchscreen

I. Working

One side of the insulator is coated with conductive material. A small voltage is applied to this layer, resulting in a uniform electrostatic field. When a conductor, such as a human finger, touches the uncoated surface, a capacitor is dynamically formed. Because of the sheet resistance of the surface, each corner is measured to have a different effective capacitance. The sensor's controller can determine the location of the touch indirectly from the change in the capacitance as measured from the four corners of the panel: the larger the change in capacitance, the closer the touch is to that corner.

II. Advantages and Disadvantages

- Advantages of Capacitive Touchscreen
  - Visibility good even in sunlight.
  - Multi touch support available.
  - User doesn’t need to apply any force.
  - More responsive than resistive touchscreens.
- Disadvantages of Capacitive Touchscreen
  - Must be touched by finger or any conductive material.
  - More expensive due to production cost.
  - Gets damaged pretty easily when dropped.

Chapter 2

Circuit Modules

2.1 Introduction

The Atmel AVR family microcontrollers are very easy-to-use, and easy-to-learn. There are lots of free, open-source tools available for it, and lots of open-source projects. Microcontrollers are very cheap and very powerfull. With them you can do an amazingly diverse range of projects, anywhere from turning TVs off in public places, to playing computer games, to making robots move or see, to creating beautiful music, to anything your imagination can come up with! And anyone can learn to make their own projects with them, given a little background.

Microcontroller can be termed as a single on chip computer which includes number of peripherals like RAM, EEPROM, Timers etc., required to perform some predefined task.

Basic Families

AVRs are generally classified into following:

TinyAVR — the ATtiny series

- 0.5–16 kB program memory
- 6–32-pin package
- Limited peripheral set

MegaAVR — the ATmega series

- 4–512 kB program memory
- 28–100-pin package
- Extended instruction set (multiply instructions and instructions for handling larger program memories)
- Extensive peripheral set

XMEGA — the ATxmega series

- 16–384 kB program memory
- 44–64–100-pin package (A4, A3, A1)
- Extended performance features, such as DMA, "Event System", and cryptography support.
- Extensive peripheral set with ADCs

Application-specific AVR

- megaAVRs with special features not found on the other members of the AVR family, such as LCD controller, USB controller, advanced PWM, CAN, etc

FPSLIC (AVR with FPGA)

- AVR core can run at up to 50 MHz

32-bit AVRs

In 2006 Atmel released microcontrollers based on the 32-bit AVR32 architecture. They include SIMD and DSP instructions, along with other audio and video processing features. This 32-bit family of devices is intended to compete with the ARM based processors. The instruction set is similar to other RISC cores, but it is not compatible with the original AVR or any of the various ARM cores.

2.2 ATmega8

I. Introduction

The ATmega8 is a low-power CMOS 8-bit microcontroller based on the AVR RISC architecture. By executing powerful instructions in a single clock cycle, the ATmega8 achieve throughputs approaching 1 MPS per MHz, allowing the system designer to optimize power consumption versus processing speed.

II. Pin Configurations

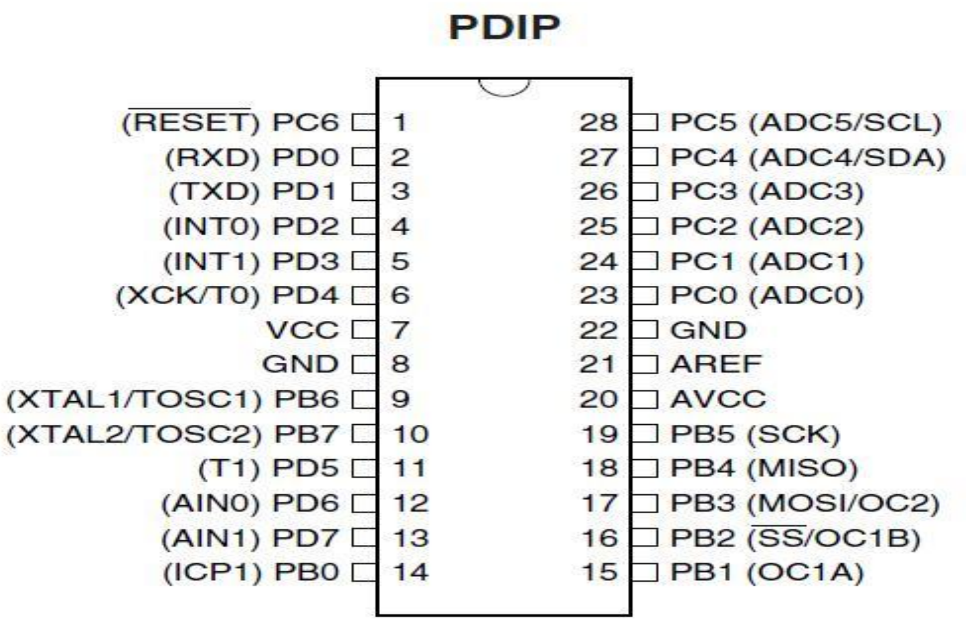

Figure 2.1 Pin Diagram of ATmega8

III. Pin Descriptions

- **VCC -** Digital supply voltage. It is simply the voltage required to operate the Atmega8.
- **GND -** Ground. It is the ground terminal and zero voltage is applied at this terminal.
- **Port B (PB7-PB0) -** Port B is an 8-bit bi-directional I/O port with internal pull-up resistors (selected for each bit). The Port B output buffers have symmetrical drive characteristics with both high sink and source capability. As inputs, Port B pins that are externally pulled low will source current if the pull-up resistors are activated. The Port B pins are tri-stated when a reset condition becomes active, even if the clock is not running.

  Depending on the clock selection fuse settings, PB6 can be used as input to the inverting Oscillator amplifier and input to the internal clock operating circuit.

  Depending on the clock selection fuse settings, PB7 can be used as output from the inverting Oscillator amplifier.

- **Port C (PC5-PC0) -** Port C is an 7-bit bi-directional I/O port with internal pull-up resistors (selected for each bit). The Port C output buffers have symmetrical drive characteristics with both high sink and source capability. As inputs, Port C pins that are externally pulled low will source current if the pull-up resistors are activated. The Port C pins are tri-stated when a reset condition becomes active, even if the clock is not running.
- **PC6/RESET -** If the RSTDISBL Fuse is programmed, PC6 is used as an I/O pin. Note that the electrical characteristics of PC6 differ from those of the other pins of Port C.

  If the Fuse is unprogrammed, PC6 is used as a Reset input. A low level on this pin for longer than the minimum pulse length will generate a Reset, even if the clock is not running.

- **Port D (PD7-PD0) -** Port D is an 8-bit bi-directional I/O port with internal pull-up resistors (selected for each bit). The Port D output buffers have symmetrical drive characteristics with both high sink and source capability. As inputs, Port D pins that are externally pulled low will source current if the pull-up resistors are activated. The Port D pins are tri-stated when a reset condition becomes active, even if the clock is not running.
- **RESET -** Reset input. A low level on this pin for longer than the minimum pulse length will generate a reset, even if the clock is not running.
- **AVCC -** AVCC is the supply voltage pin for the A/D Converter, Port C (3-0), and ADC (7-6). It should be externally connected to VCC, even if the ADC is not used. If the ADC is used, it should be connected to VCC through a low-pass filter. Note that Port C (5-4) use digital supply voltage, VCC.
- **AREF -** AREF is the Analog reference pin for the Analog to Digital Converter.

2.3 L293dne

I. Introduction

The L293DNE has 16 pins. If you're just driving a single motor you can ignore 5 of those pins (9-11, 14-15). Pin 16 powers the logic of the controller and should always be set to +5V. Pin 8 provides power for both motors. Often you'll want a stronger and independent power source for your motors than from the rest of the logic. Your motor power source should have its positive node connected to pin 8, and ground connected to the grounds of pins 4, 5, 12, and 13. Grounds for your logic control source should also be connected to the same pins.

The motor will be connected to pins 3 and 6. The basic idea is that when power is supplied to pin 2, pin 3 will become positive and pin 6 will become ground for the motor. When power is supplied to pin 7, pin 6 will become positive and pin 3 will become ground. Depending on which control pin (2 or 7) you have powered, the polarity of the circuit that's going through the motor will change. If neither 2 nor 7 is powered, there will be no circuit going through pin 3 and 6 and the motor will not be powered. Motor 1 and 2 are turned on and off by pin 1 and 9 respectively. If either of these pins does not have +5V connected to them, the motor associated with that pin will also not receive power.

The device is designed to drive inductive loads such as relays, solenoids, dc and bipolar stepping motors, as well as other high current/high voltage loads in positive supply applications. All inputs are TTL compatible. Each output is a complete totem pole drive circuit, with a Darlington transistor sink and a pseudo-Darlington source. Drivers are enabled in pairs, with drivers 1 and 2 enabled by 1,2EN and drivers 3 and 4 enabled by 3,4EN. When an enable input is high, the associated drivers are enabled and their outputs are active and in phase with their inputs. When the enable input is low, those drivers are disabled and their outputs are off and in the high impedance state. With the proper data inputs, each pair of drivers forms a full-H (or bridge) reversible drive suitable for motor applications.

II. Pin Diagram

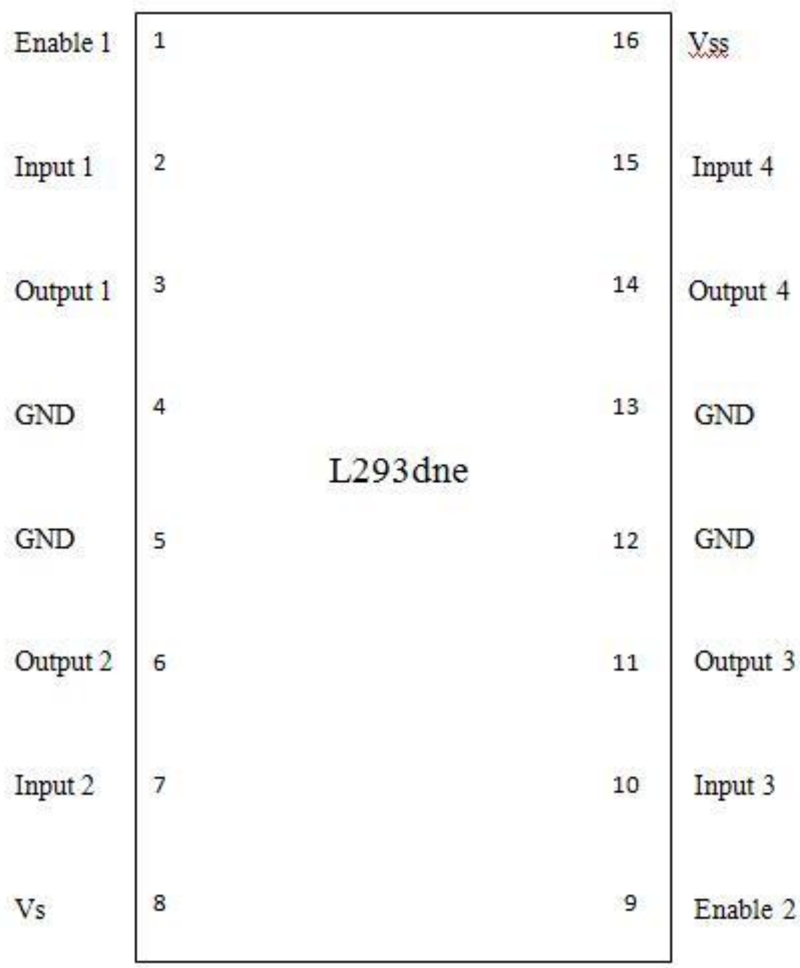

Figure 2.2 Pin Diagram of L293dne

III. Pin description

- **Vss** – Supply voltage to L293dne which is 5 volts.
- **GND(pin4,pin5,pin12,pin13) -** These pins are grounded.
- L293dne has four output and four input pins.
- Motors can be drived through this L293dne.
- Motors are to be connected between pin3 and pin6,pin11-pin14.
- Input to this IC comes from controller to input pins(pin2, pin7, pin10, pin15) and accordingly motors will work.

2.4 IC 7805

I. Introduction

The 78xx (sometimes L78xx, LM78xx, MC78xx...) is a family of self-contained fixed linear voltage regulator integrated circuits. The 78xx family is commonly used in electronic circuits requiring a regulated power supply due to their ease-of-use and low cost. For ICs within the family, the *xx* is replaced with two digits, indicating the output voltage (for example, the 7805 has a 5 volt output, while the 7812 produces 12 volts). The 78xx line are positive voltage regulators: they produce a voltage that is positive relative to a common ground. There is a related line of 79xx devices which are complementary negative voltage regulators. 78xx and 79xx ICs can be used in combination to provide positive and negative supply voltages in the same circuit.

78xx ICs have three terminals and are commonly found in the TO220 form factor, although smaller surface-mount and larger TO3 packages are available. These devices support an input voltage anywhere from a few volts over the intended output voltage, up to a maximum of 35 to 40 volts depending on the make, and typically provide 1 or 1.5 amperes of current (though smaller or larger packages may have a lower or higher current rating).

Ic 7805 is a 5 volt three terminal regulator. For this family of regulators the last digit signify the voltage output that it will regulate.

II. Diagram

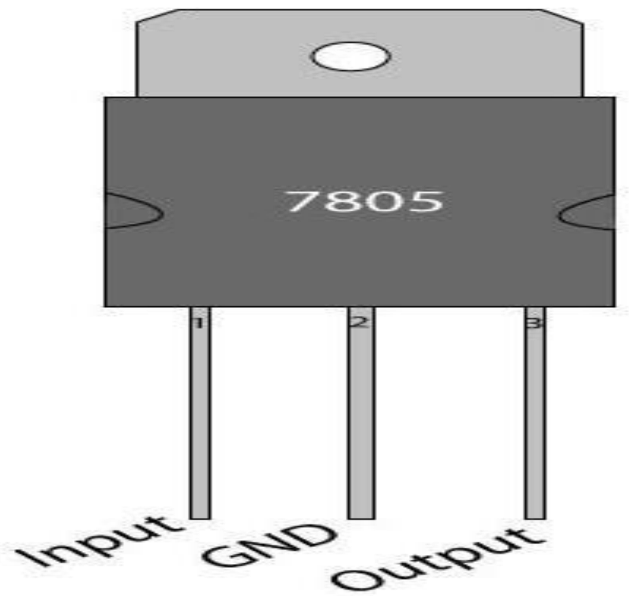

Figure 2.3 IC 7805

III. Advantages

- 78xx series ICs do not require additional components to provide a constant, regulated source of power, making them easy to use, as well as economical and efficient uses of space. Other voltage regulators may require additional components to set the output voltage level, or to assist in the regulation process. Some other designs (such as aswitched-mode power supply) may need substantial engineering expertise to implement.
- 78xx series ICs have built-in protection against a circuit drawing too much power. They have protection against overheating and short-circuits, making them quite robust in most applications. In some cases, the current-limiting features of the 78xx devices can provide protection not only for the 78xx itself, but also for other parts of the circuit.

IV. Disadvantages

- The input voltage must always be higher than the output voltage by some minimum amount (typically 2.5 volts). This can make these devices unsuitable for powering some devices from certain types of power sources (for example, powering a circuit that requires 5 volts using 6-volt batteries will not work using a 7805).
- As they are based on a linear regulator design, the input current required is always the same as the output current. As the input voltage must always be higher than the output voltage, this means that the total power (voltage multiplied by current) going into the 78xx will be more than the output power provided. The extra input power is dissipated as heat. This means both that for some applications an adequate heatsink must be provided, and also that a (often substantial) portion of the input power is wasted during the process, rendering them less efficient than some other types of power supplies. When the input voltage is significantly higher than the regulated output voltage (for example, powering a 7805 using a 24 volt power source), this inefficiency can be a significant issue.

2.5 Block Diagram

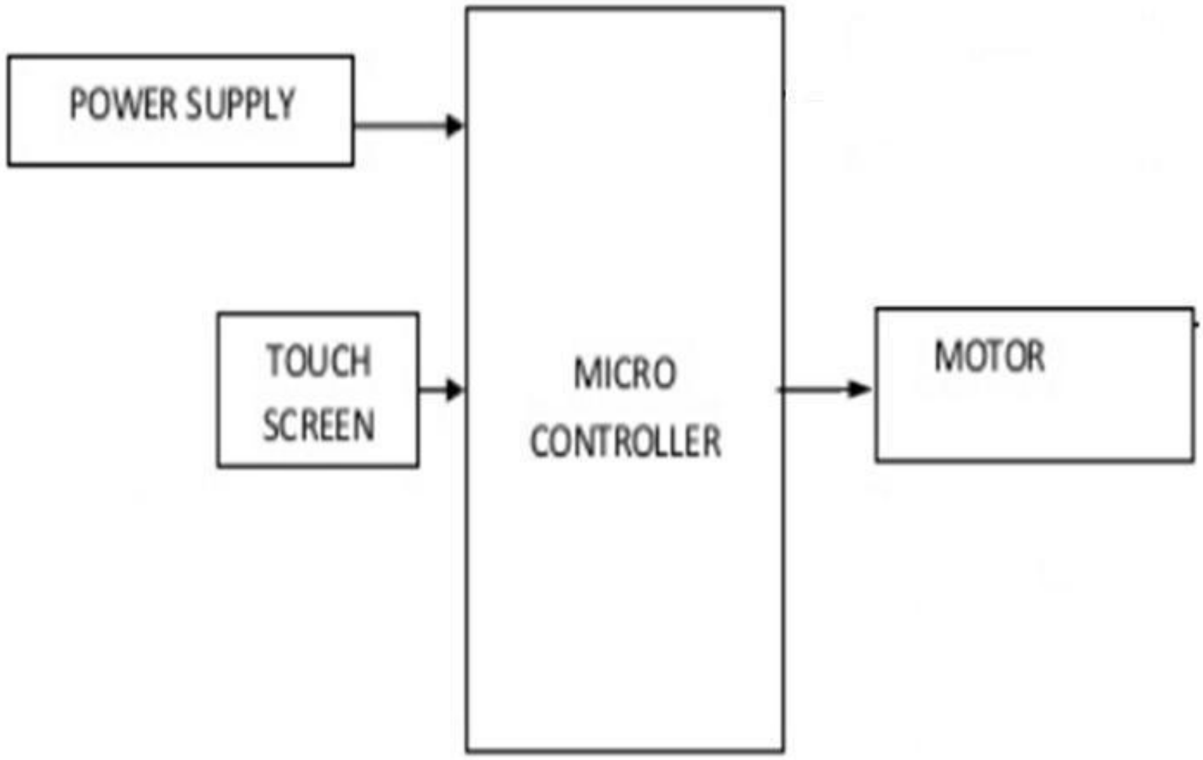

Figure 2.4 Block Diagram of Wheelchair

Explanation:

As can be seen from above block diagram that basically it has four blocks . One is microcontroller which controls all the operations. In this, user touches the resistive touchscreen and a analog signal is generated which goes to atmega8 microcontroller and it has inbuilt analaog to digital converter.

Then signal is send to the IC L293dne and according to the input, it performs the operation and wheel chair is moved in a particular direction according to the user input.

2.6 Touch Mapping

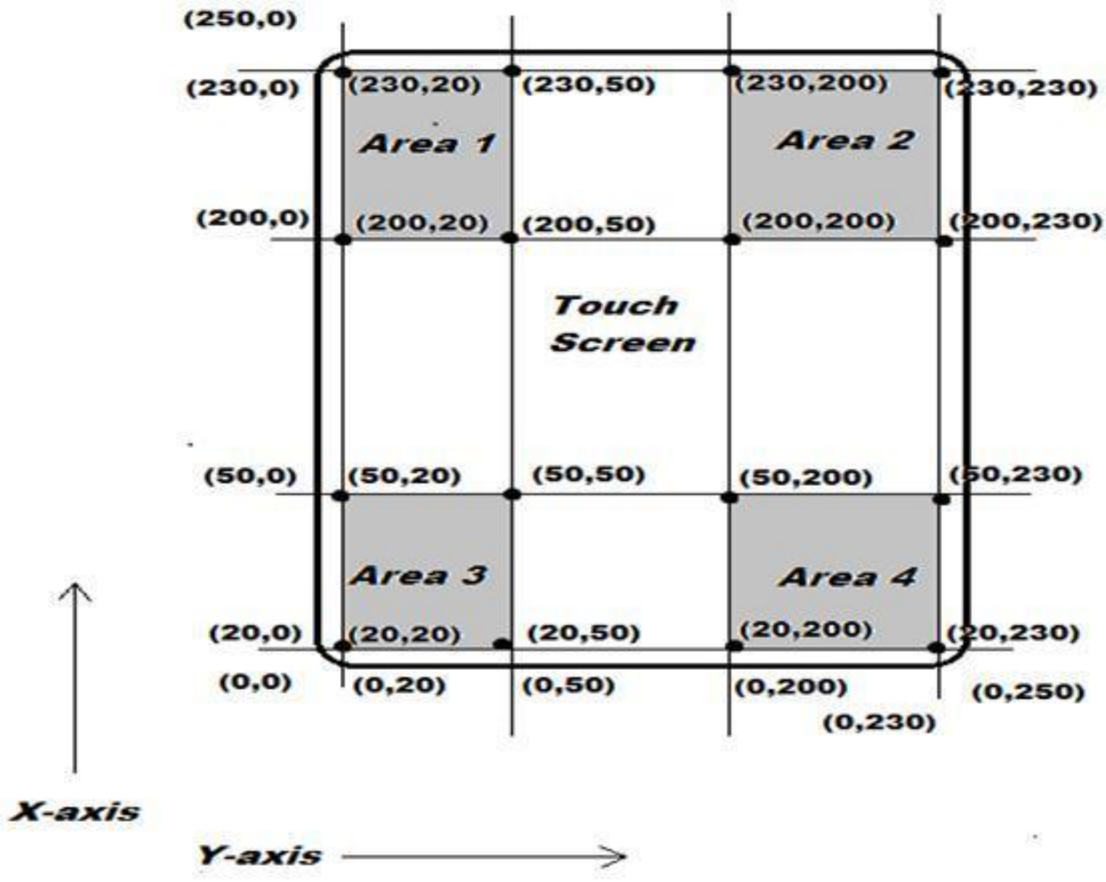

Figure 2.5 Touch Screen Mapping

Explanation:

Complete touchscreen is mapped in form of coordinates. As can be seen from (figure 2.5) that whole touchscreen is divided in form of coordinates and accordingly certain operations are allotted at particular coordinates. When user touches at particular point on a touchscreen , a certain response is activated.It has two axis ,one is x-axis and other is y-axis and accordingly coordinates are made and accordingly resolution of touchscreen is decided.

2.7 Circuit Diagram

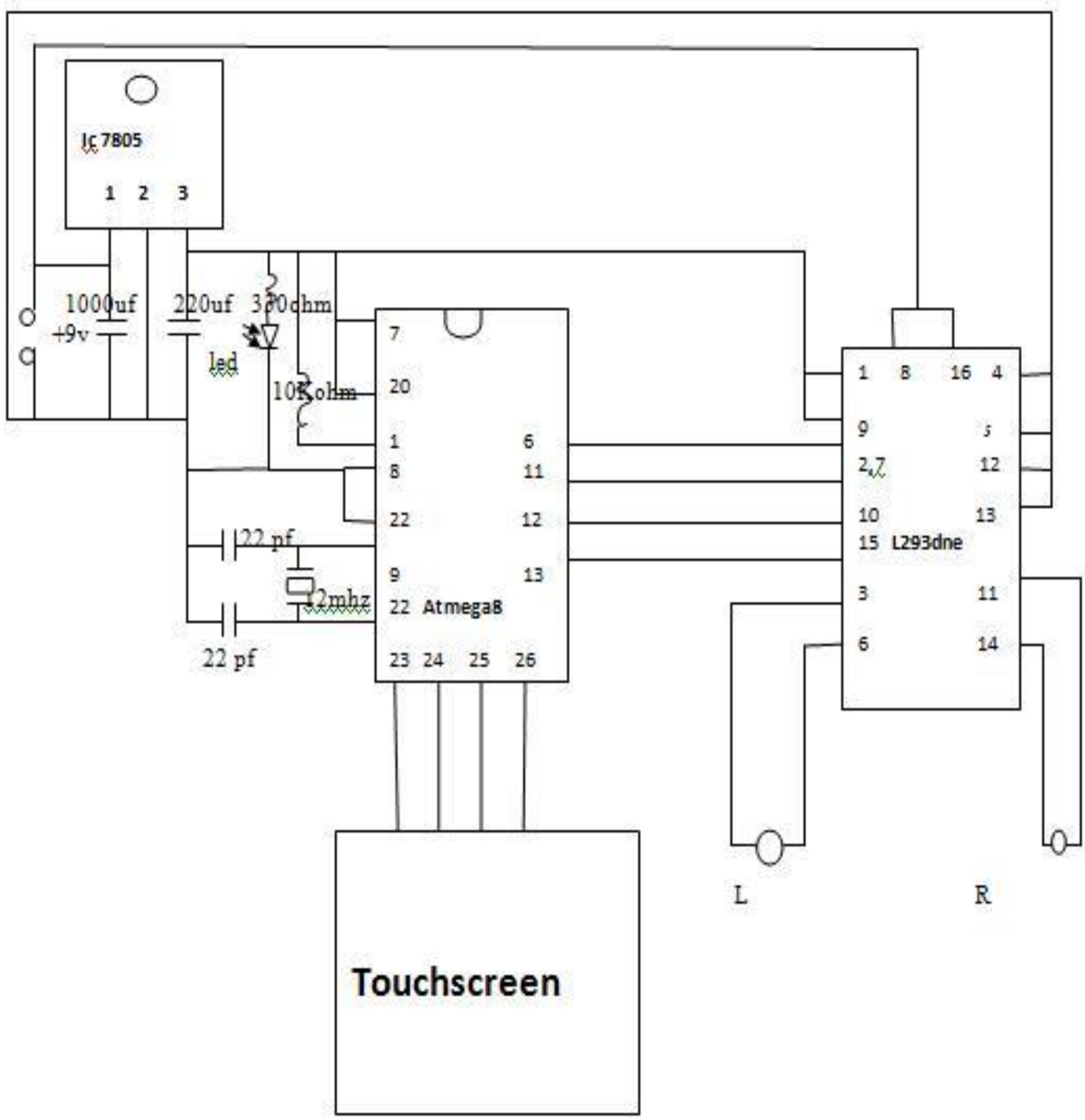

Figure 2.6 Circuit Diagram

Chapter 3

Hardware Requirements

3.1 The Resistor

I. Introduction

A resistor is a passive two-terminal electrical component that implements electrical resistance as a circuit element. Resistors act to reduce current flow, and, at the same time, act to lower voltage levels within circuits. Resistors may have fixed resistances or variable resistances, such as those found in thermistors, varistors, trimmers, photoresistors, humistors and potentiometers.

The current through a resistor is in direct proportion to the voltage across the resistor's terminals. This relationship is represented by Ohm's law:

$$I = \frac{V}{R}$$

where I is the current through the conductor in units of amperes, V is the potential difference measured across the conductor in units of volts, and R is the resistance of the conductor in units of ohms (symbol: Ω).

The ratio of the voltage applied across a resistor's terminals to the intensity of current in the circuit is called its resistance, and this can be assumed to be a constant (independent of the voltage) for ordinary resistors working within their ratings.

Many electrical elements, such as diodes and batteries do not satisfy Ohm's law. These are called non-ohmic or nonlinear, and are characterized by an I–V curve, which is not a straight line through the origin.

Resistance and conductance can still be defined for non-ohmic elements. However, unlike ohmic resistance, nonlinear resistance is not constant but varies with the voltage or current through the device. There are two types:

Static resistance (also called DC resistance) - This corresponds to the usual definition of resistance; the voltage divided by the current.

It is the slope of the line (chord) from the origin through the point on the curve. Static resistance determines the power dissipation in an electrical component. Points on the IV curve located in the 2nd or 4th quadrants, for which the slope of the chordal line is negative, have negative static resistance. Passive devices, which have no source of energy, cannot have negative static resistance. However active devices such as transistors or op-amps can synthesize negative static resistance with feedback, and it is used in some circuits such as gyrators.

Differential resistance (also called dynamic, incremental or small signal resistance) - Differential resistance is the derivative of the voltage with respect to the current.

If the IV curve is non monotonic (with peaks and troughs), the curve has a negative slope in some regions so in these regions the device has negative differential resistance. Devices with negative differential resistance can amplify a signal applied to them, and are used to make amplifiers and oscillators. These include magnetron tubes, and unijunction transistors.

Resistors (and other elements with resistance) oppose the flow of electric current, therefore, electrical energy is required to push current through the resistance. This electrical energy is dissipated, heating the resistor in the process. This is called Joule heating (after James Prescott Joule), also called ohmic heating or resistive heating.

The dissipation of electrical energy is often undesired, particularly in the case of transmission losses in power lines. High voltage transmission helps reduce the losses by reducing the current for a given power.

Temperature dependence is also another factor .On the other hand, Joule heating is sometimes useful, for example in electric stoves and other electric heaters (also called resistive heaters). As another example, incandescent lamps rely on Joule heating: the filament is heated to such a high temperature that it glows "white hot" with thermal radiation (also called incandescence).

Near room temperature, the resistivity of metals typically increases as temperature is increased, while the resistivity of semiconductors typically decreases as temperature is increased. The resistivity of insulators and electrolytes may increase or decrease depending on the system.

As a consequence, the resistance of wires, resistors, and other components often change with temperature. This effect may be undesired, causing an electronic circuit to malfunction at extreme temperatures. In some cases, however, the effect is put to good use. When temperature-dependent resistance of a component is used purposefully, the component is called a resistance thermometer or thermistor. (A resistance thermometer is made of metal, usually platinum, while a thermistor is made of ceramic or polymer.)

Resistance thermometers and thermistors are generally used in two ways. First, they can be used as thermometers: By measuring the resistance, the temperature of the environment can be inferred. Second, they can be used in conjunction with Joule heating (also called self-heating): If a large current is running through the resistor, the resistor's temperature rises and therefore its resistance changes. Therefore, these components can be used in a circuit-protection role similar to fuses, or for feedback in circuits, or for many other purposes. In general, self-heating can turn a resistor into a nonlinear and hysteretic circuit element.

Resistors are common elements of electrical networks and electronic circuits and are ubiquitous in electronic equipment. Practical resistors can be composed of various compounds and films, as well as resistance wires (wire made of a high-resistivity alloy, such as nickel-chrome). Resistors are also implemented within integrated circuits, particularly analog devices, and can also be integrated into hybrid and printed circuits.

The electrical functionality of a resistor is specified by its resistance: common commercial resistors are manufactured over a range of more than nine orders of magnitude. When specifying that resistance in an electronic design, the required precision of the resistance may require

attention to the manufacturing tolerance of the chosen resistor, according to its specific application. The temperature coefficient of the resistance may also be of concern in some

precision applications. Practical resistors are also specified as having a maximum power rating which must exceed the anticipated power dissipation of that resistor in a particular circuit: this is mainly of concern in power electronics applications. Resistors with higher power ratings are physically larger and may require heat sinks. In a high-voltage circuit, attention must sometimes be paid to the rated maximum working voltage of the resistor. While there is no minimum working voltage for a given resistor, failure to account for a resistor's maximum rating may cause the resistor to incinerate when current is run through it.

Practical resistors have a series inductance and a small parallel capacitance , these specifications can be important in high-frequency applications. In a low-noise amplifier or pre-amp, the noise characteristics of a resistor may be an issue. The unwanted inductance, excess noise, and temperature coefficient are mainly dependent on the technology used in manufacturing the resistor. They are not normally specified individually for a particular family of resistors manufactured using a particular technology. A family of discrete resistors is also characterized according to its form factor, that is, the size of the device and the position of its leads (or terminals) which is relevant in the practical manufacturing of circuits using them.

II. Units

The ohm (symbol: Ω) is the SI unit of electrical resistance, named after Georg Simon Ohm. An ohm is equivalent to a volt per ampere. Since resistors are specified and manufactured over a very large range of values, the derived units of milliohm (1 mΩ = 10^{-3} Ω), kilohm (1 kΩ = 10^{3} Ω), and megohm (1 MΩ = 10^{6} Ω) are also in common usage.

The reciprocal of resistance R is called conductance G = 1/R and is measured in siemens (SI unit), sometimes referred to as a mho. Hence, siemens is the reciprocal of an ohm: $S = \Omega^{-1}$.

Although the concept of conductance is often used in circuit analysis, practical resistors are always specified in terms of their resistance (ohms) rather than conductance.

III. Theory Of Operation

Ohm's law

The behavior of an ideal resistor is dictated by the relationship specified by Ohm's law:

$$V = I.R$$

Ohm's law states that the voltage (V) across a resistor is proportional to the current (I), where the constant of proportionality is the resistance (R).

Equivalently, Ohm's law can be stated:

$$I = \frac{V}{R}$$

This formulation states that the current (I) is proportional to the voltage (V) and inversely proportional to the resistance (R). This is directly used in practical computations. For example, if a 300 ohm resistor is attached across the terminals of a 12 volt battery, then a current of 12 / 300 = 0.04 amperes (or 40 milliamperes) flows through that resistor.

IV. Series and Parallel Resistors

In a series configuration, the current through all of the resistors is the same, but the voltage across each resistor will be in proportion to its resistance. The potential difference (voltage) seen across the network is the sum of those voltages, thus the total resistance can be found as the sum of those resistances:

$$= {}_1 + {}_2 + {}_3 + \dots +$$

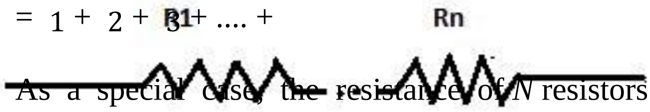

As a special case, the resistance of *N* resistors connected in series, each of the same resistance *R*, is given by *NR*. Thus, if a 100K ohm resistor and a 22K ohm resistor are connected in series, their combined resistance will be 122K ohm— they will function in a circuit as though they were a single resistor with a resistance value of 122K ohm; three 22K ohm resistors (*N*=3, *R*=22K) will produce a resistance of 3x22K=66K ohms.

Resistors in a parallel configuration are each subject to the same potential difference (voltage), however the currents through them add. The conductances of the resistors then add to determine the conductance of the network. Thus the equivalent resistance (R_{eq}) of the network can be computed:

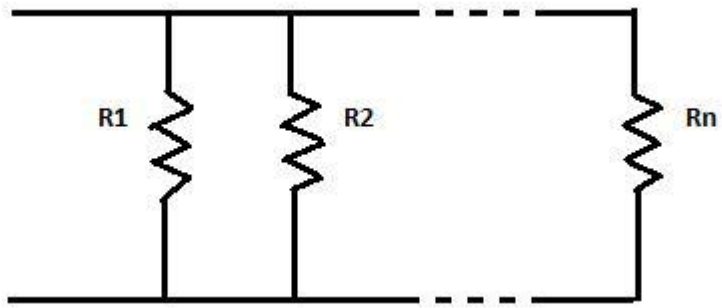

$$\frac{1}{R_{eq}} = \frac{1}{R_1} + \frac{1}{R_2} + \dots + \frac{1}{R_n}$$

So, for example, a 10 ohm resistor connected in parallel with a 5 ohm resistor and a 15 ohm resistor will produce the inverse of 1/10+1/5+1/15 ohms of resistance, or 1/(.1+.2+.067)=2.725 ohms. The greater the number of resistors in parallel, the less overall resistance they will collectively generate, and the resistance will never be higher than that of the resistor with the lowest resistance in the group (in the case above, the resistor with the least resistance is the 5 ohm resistor, therefore the combined resistance of all resistors attached to it in parallel will never be greater than 5 ohms).

The parallel equivalent resistance can be represented in equations by two vertical lines "||" (as in geometry) as a simplified notation. Occasionally two slashes "//" are used instead of "||", in case the keyboard or font lacks the vertical line symbol. For the case of two resistors in parallel, this can be calculated using:

$$R_{eq} = R_1 \| R_2 = \frac{R_1 R_2}{R_1 + R_2}$$

A resistor network that is a combination of parallel and series connections can be broken up into smaller parts that are either one or the other. For instance,

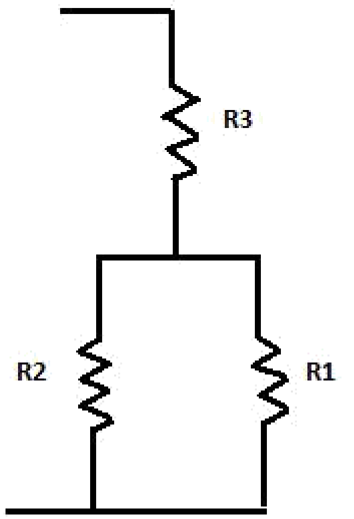

12=(1|2+3=1+2+3

However, some complex networks of resistors cannot be resolved in this manner, requiring more uit analysis. For instance, consider a cube, each edge of which has been replaced by a resistor. What then is the resistance that would be measured between two opposite vertices? In the case of 12 equivalent resistors, it can be shown that the corner-to-corner resistance is $^{5}\!/_{6}$ of the individual resistance. More generally, the Y- transform, or matrix methods can be used to solve such a problem.

One practical application of these relationships is that a non-standard value of resistance can hesized by connecting a number of standard values in series or parallel. This can also be used to obtain a resistance with a higher power rating than that of the individual resistors used. In the special case of *N* identical resistors all connected in series or all connected in parallel, the power rating of the composite resistor is *N* times the power rating of the individual resistors.

V. Color Code

5 and 6 Band Resistor Color Codes

Color	First Three Bands	Fourth Band (the Multiplier)	Fifth Band (Resistor Tolerance)	Sixth Band Temp Coefficient (ppm/K)
Black	0	1	None 20.00 %	Black 250
Brown	1	10	Silver 10.00 %	Brown 100
Red	2	100	Gold 5.00 %	Red 50
Orange	3	1,000	Red 2.00 %	Yellow 25
Yellow	4	10,000	Brown 1.00 %	Green 20
Green	5	100,000	Green 0.50 %	Orange 15
Blue	6	1,000,000	Blue 0.25 %	Blue 10
Violet	7	10,000,000	Violet 0.10 %	Violet 5
Gray	8	Gold 0.10	Gray 0.05 %	Gray 1
White	9	Silver 0.01	www.1728.com	

Figure 3.1 Color Code Of Resistor

3.2 The Capacitor

I. Introduction

A capacitor (originally known as a condenser) is a passive two-terminal electrical component used to store energy electrostatically in an electric field. The forms of practical capacitors vary widely, but all contain at least two electrical conductors (plates) separated by a dielectric (i.e., insulator). The conductors can be thin films of metal, aluminium foil or disks, etc. The 'nonconducting' dielectric acts to increase the capacitor's charge capacity. A dielectric can be glass, ceramic, plastic film, air, paper, mica, etc. Capacitors are widely used as parts of electrical circuits in many common electrical devices. Unlike a resistor, a capacitor does not dissipate energy. Instead, a capacitor stores energy in the form of an electrostatic field between its plates.

When there is a potential difference across the conductors (e.g., when a capacitor is attached across a battery), an electric field develops across the dielectric, causing positive charge (+Q) to collect on one plate and negative charge (-Q) to collect on the other plate. If a battery has been attached to a capacitor for a sufficient amount of time, no current can flow through the capacitor. However, if an accelerating or alternating voltage is applied across the leads of the capacitor, a displacement current can flow.

An ideal capacitor is characterized by a single constant value for its capacitance. Capacitance is expressed as the ratio of the electric charge (Q) on each conductor to the potential difference (V) between them. The SI unit of capacitance is the farad (F), which is equal to one coulomb per volt (1 C/V). Typical capacitance values range from about 1 pF (10^{-12} F) to about 1 mF (10^{-3} F).

The capacitance is greater when there is a narrower separation between conductors and when the conductors have a larger surface area. In practice, the dielectric between the plates passes a small amount of leakage current and also has an electric field strength limit, known as the breakdown voltage. The conductors and leads introduce an undesired inductance and resistance.

Capacitors are widely used in electronic circuits for blocking direct current while allowing alternating current to pass. In analog filter networks, they smooth the output of power supplies. In resonant circuits they tune radios to particular frequencies. In electric power transmission systems they stabilize voltage and power flow.

II. Working

A capacitor consists of two conductors separated by a non-conductive region. The non-conductive region is called the dielectric. In simpler terms, the dielectric is just an electrical insulator. Examples of dielectric media are glass, air, paper, vacuum, and even a semiconductor depletion region chemically identical to the conductors. A capacitor is assumed to be self-contained and isolated, with no net electric charge and no influence from any external electric field. The conductors thus hold equal and opposite charges on their facing surfaces, and the dielectric develops an electric field. In SI units, a capacitance of one farad means that one coulomb of charge on each conductor causes a voltage of one volt across the device.

An ideal capacitor is wholly characterized by a constant capacitance *C*, defined as the ratio of charge $\pm Q$ on each conductor to the voltage *V* between them:

$$C = \frac{Q}{V}$$

Because the conductors (or plates) are close together, the opposite charges on the conductors attract one another due to their electric fields, allowing the capacitor to store more charge for a given voltage than if the conductors were separated, giving the capacitor a large capacitance.

Sometimes charge build-up affects the capacitor mechanically, causing its capacitance to vary. In this case, capacitance is defined in terms of incremental changes:

III. Energy of electric field

Work must be done by an external influence to "move" charge between the conductors in a capacitor. When the external influence is removed, the charge separation persists in the electric field and energy is stored to be released when the charge is allowed to return to its equilibrium position. The work done in establishing the electric field, and hence the amount of energy stored, is

$$= \quad = \quad = \quad \frac{1}{2} \quad = \frac{1}{2}{}^{2} = \quad \frac{1}{2}$$

Here *Q* is the charge stored in the capacitor, *V* is the voltage across the capacitor, and *C* is the capacitance.

In the case of a fluctuating voltage *V*(*t*), the stored energy also fluctuates and hence power must flow into or out of the capacitor. This power can be found by taking the time derivative of the stored energy:

$$= \quad = \quad \frac{1}{2}{}^{2} \quad = () $$

IV. Breakdown voltage

Above a particular electric field, known as the dielectric strength E_{ds}, the dielectric in a capacitor becomes conductive. The voltage at which this occurs is called the breakdown voltage of the device, and is given by the product of the dielectric strength and the separation between the conductors,

$$=$$

The maximum energy that can be stored safely in a capacitor is limited by the breakdown voltage. Due to the scaling of capacitance and breakdown voltage with dielectric thickness, all capacitors made with a particular dielectric have approximately equal maximum energy density, to the extent that the dielectric dominates their volume.

For air dielectric capacitors the breakdown field strength is of the order 2 to 5 MV/m; for mica the breakdown is 100 to 300 MV/m, for oil 15 to 25 MV/m, and can be much less when other materials are used for the dielectric. The dielectric is used in very thin layers and so absolute breakdown voltage of capacitors is limited. Typical ratings for capacitors used for general electronics applications range from a few volts to 1 kV. As the voltage increases, the dielectric must be thicker, making high-voltage capacitors larger per capacitance than those rated for lower voltages. The breakdown voltage is critically affected by factors such as the geometry of the capacitor conductive parts; sharp edges or points increase the electric field strength at that point and can lead to a local breakdown. Once this starts to happen, the breakdown quickly tracks through the dielectric until it reaches the opposite plate, leaving carbon behind causing a short circuit.

The usual breakdown route is that the field strength becomes large enough to pull electrons in the dielectric from their atoms thus causing conduction. Other scenarios are possible, such as impurities in the dielectric, and, if the dielectric is of a crystalline nature, imperfections in the crystal structure can result in an avalanche breakdown as seen in semi-conductor devices. Breakdown voltage is also affected by pressure, humidity and temperature.

V. Leakage

Leakage is equivalent to a resistor in parallel with the capacitor. Constant exposure to heat can cause dielectric breakdown and excessive leakage, a problem often seen in older vacuum tube circuits, particularly where oiled paper and foil capacitors were used. In many vacuum tube circuits, inter stage coupling capacitors are used to conduct a varying signal from the plate of one tube to the grid circuit of the next stage. A leaky capacitor can cause the grid circuit voltage to be raised from its normal bias setting, causing excessive current or signal distortion in the downstream tube. In power amplifiers this can cause the plates to glow red, or current limiting resistors to overheat, even fail. Similar considerations apply to component fabricated solid-state (transistor) amplifiers, but owing to lower heat production and the use of modern polyester dielectric barriers this once-common problem has become relatively rare.

VI. Applications

- **Energy storage**

A capacitor can store electric energy when disconnected from its charging circuit, so it can be used like a temporary battery, or like other types of rechargeable energy storage system. Capacitors are commonly used in electronic devices to maintain power supply while batteries are being changed. (This prevents loss of information in volatile memory.)

Conventional capacitors provide less than 360 joules per kilogram of energy density, whereas a conventional alkaline battery has a density of 590 kJ/kg.

In car audio systems, large capacitors store energy for the amplifier to use on demand. Also for a flash tube a capacitor is used to hold the high voltage.

- **Pulsed power and weapons**

Groups of large, specially constructed, low-inductance high-voltage capacitors are used to supply huge pulses of current for many pulsed power applications. These include electromagnetic forming, Marx generators, pulsed lasers (especially TEA lasers), pulse forming networks, radar, fusion research, and particle accelerators.

Large capacitor banks (reservoir) are used as energy sources for the exploding-bridge wire detonators or slapper detonators in nuclear weapons and other specialty weapons. Experimental work is under way using banks of capacitors as power sources for electromagnetic armour and electromagnetic rail guns and coil guns.

- **Power conditioning**

Figure 3.2 10 millifarad capacitor in an amplifier power supply

Reservoir capacitors are used in power supplies where they smooth the output of a full or half wave rectifier. They can also be used in charge pump circuits as the energy storage element in the generation of higher voltages than the input voltage.

Capacitors are connected in parallel with the power circuits of most electronic devices and larger systems (such as factories) to shunt away and conceal current fluctuations from the primary power source to provide a "clean" power supply for signal or control circuits. Audio equipment, for example, uses several capacitors in this way, to shunt away power line hum before it gets into the signal circuitry. The capacitors act as a local reserve for the DC power source, and bypass AC currents from the power supply. This is used in car audio applications, when a stiffening capacitor compensates for the inductance and resistance of the leads to the lead-acid car battery.

3.3 Light-Emitting Diode

A light-emitting diode (LED) is a two-lead semiconductor light source that resembles a basic pn-junction diode, except that an LED also emits light. When an LED's anode lead has a voltage that is more positive than its cathode lead by at least the LED's forward voltage drop, current flows. Electrons are able to recombine with holes within the device, releasing energy in the form of photons. This effect is called electroluminescence, and the color of the light (corresponding to the energy of the photon) is determined by the energy band gap of the semiconductor.

Recent developments in LEDs permit them to be used in environmental and task lighting. LEDs have many advantages over incandescent light sources including lower energy consumption, longer lifetime, improved physical robustness, smaller size, and faster switching. Light-emitting diodes are now used in applications as diverse as aviation lighting, automotive headlamps, advertising, general lighting, traffic signals, and camera flashes. However, LEDs powerful enough for room lighting are still relatively expensive, and require more precise current and heat management than compact fluorescent lamp sources of comparable output.

The LED consists of a chip of semiconducting material doped with impurities to create a p-n junction. As in other diodes, current flows easily from the p-side, or anode, to the n-side, or cathode, but not in the reverse direction. Charge-carriers— electrons and holes—flow into the junction from electrodes with different voltages. When an electron meets a hole, it falls into a lower energy level and releases energy in the form of a photon.

The wavelength of the light emitted, and thus its colour, depends on the band gap energy of the materials forming the p-n junction. In silicon or germanium diodes, the electrons and holes recombine by a non-radiative transition, which produces no optical emission, because these are indirect band gap materials. The materials used for the LED have a direct band gap with energies corresponding to near-infrared, visible, or near-ultraviolet light.

Solid-state devices such as LEDs are subject to very limited wear and tear if operated at low currents and at low temperatures. Many of the LEDs made in the 1970s and 1980s are still in service in the early 21st century. Typical lifetimes quoted are 25,000 to 100,000 hours, but heat and current settings can extend or shorten this time significantly.

The most common symptom of LED (and diode laser) failure is the gradual lowering of light output and loss of efficiency. Sudden failures, although rare, can occur as well. Early red LEDs were notable for their short service life. With the development of high-power LEDs the devices are subjected to higher junction temperatures and higher current densities than traditional devices. This causes stress on the material and may cause early light-output degradation. To quantitatively classify useful lifetime in a standardized manner it has been suggested to use the terms L70 and L50, which is the time it will take a given LED to reach 70% and 50% light output respectively.

LED performance is temperature dependent. Most manufacturers' published ratings of LEDs are for an operating temperature of 25 °C. LEDs used outdoors, such as traffic signals or in-pavement signal lights, and that are utilized in climates where the temperature within the light fixture gets very hot, could result in low signal intensities or even failure.

LED light output rises at lower temperatures, leveling off, depending on type, at around −30 °C. Thus, LED technology may be a good replacement in uses such as supermarket freezer lighting and will last longer than other technologies. Because LEDs emit less heat than incandescent bulbs, they are an energy-efficient technology for uses such as in freezers and refrigerators. However, because they emit little heat, ice and snow may build up on the LED light fixture in colder climates. Similarly, this lack of waste heat generation has been observed to sometimes cause significant problems with street traffic signals and airport runway lighting in snow-prone areas. In response to this problem, some LED lighting systems have been designed with an added heating circuit at the expense of reduced overall electrical efficiency of the system; additionally, research has been done to develop heat sink technologies that will transfer heat produced within the junction to appropriate areas of the light fixture.

Typical indicator LEDs are designed to operate with no more than 30–60 milliwatts (mW) of electrical power. Around 1999,Philips Lumileds introduced power LEDs capable of continuous use at one watt. These LEDs used much larger semiconductor die sizes to handle the large power inputs.

One of the key advantages of LED-based lighting sources is high luminous efficacy. White LEDs quickly matched and overtook the efficacy of standard incandescent lighting systems. Now a days, Lumileds made five-watt LEDs available with aluminous efficacy of 18–22 lumens per watt (lm/W). For comparison, a conventional incandescent light bulb of 60–100 watts emits around 15 lm/W, and standard fluorescent lights emit up to 100 lm/W.

3.4 Crystal Oscillator

A crystal oscillator is an electronic oscillator circuit that uses the mechanical resonance of a vibrating crystal of piezoelectric material to create an electrical signal with a very precise frequency. This frequency is commonly used to keep track of time (as in quartz wristwatches), to provide a stable clock signal for digital integrated circuits, and to stabilize frequencies for radio transmitters and receivers. The most common type of piezoelectric resonator used is the quartz crystal, so oscillator circuits incorporating them became known as crystal oscillators, but other piezoelectric materials including polycrystalline ceramics are used in similar circuits.

Most are used for consumer devices such as wristwatches, clocks, radios, computers, and cell phones. Quartz crystals are also found inside test and measurement equipment, such as counters, signal generators, and oscilloscopes.

The frequency stability is determined by the crystal's Q. It is inversely dependent on the frequency, and on the constant that is dependent on the particular cut. Other factors influencing Q are the overtone used, the temperature, the level of driving of the crystal, the quality of the surface finish, the mechanical stresses imposed on the crystal by bonding and mounting, the geometry of the crystal and the attached electrodes, the material purity and defects in the crystal, type and pressure of the gas in the enclosure, interfering modes, and presence and absorbed dose of ionizing and neutron radiation.

Temperature influences the operating frequency; various forms of compensation are used, from analog compensation and microcontroller compensation to stabilization of the temperature with a crystal oven . The crystals possess temperature hysteresis; the frequency at a given temperature achieved by increasing the temperature is not equal to the frequency on the same temperature achieved by decreasing the temperature. The temperature sensitivity depends primarily on the cut; the temperature compensated cuts are chosen as to minimize frequency/temperature dependence. Special cuts can be made with linear temperature characteristics; the LC cut is used in quartz thermometers. Other influencing factors are the overtone used, the mounting and electrodes, impurities in the crystal, mechanical strain, crystal geometry, rate of temperature change, thermal history (due to hysteresis), ionizing radiation, and drive level.

Crystals tend to suffer anomalies in their frequency/temperature and resistance/temperature characteristics, known as activity dips. These are small downward (in frequency) or upward (in resistance) excursions localized at certain temperatures, with their temperature position dependent on the value of the load capacitors.

Mechanical stresses also influence the frequency. The stresses can be induced by mounting, bonding, and application of the electrodes, by differential thermal expansion of the mounting, electrodes, and the crystal itself, by differential thermal stresses when there is a temperature gradient present, by expansion or shrinkage of the bonding materials during curing, by the air pressure that is transferred to the ambient pressure within the crystal enclosure, by the stresses of the crystal lattice itself (non uniform growth, impurities, dislocations), by the surface imperfections and damage caused during manufacture, and by the action of gravity on the mass of the crystal; the frequency can therefore be influenced by position of the crystal. Other dynamic stress inducing factors are shocks, vibrations, and acoustic noise. Some cuts are less sensitive to stresses; the SC (Stress Compensated) cut is an example. Atmospheric pressure changes can also introduce deformations to the housing, influencing the frequency by changing stray capacitances.

Atmospheric humidity influences the thermal transfer properties of air, and can change electrical properties of plastics by diffusion of water molecules into their structure, altering the dielectric constants and electrical conductivity.

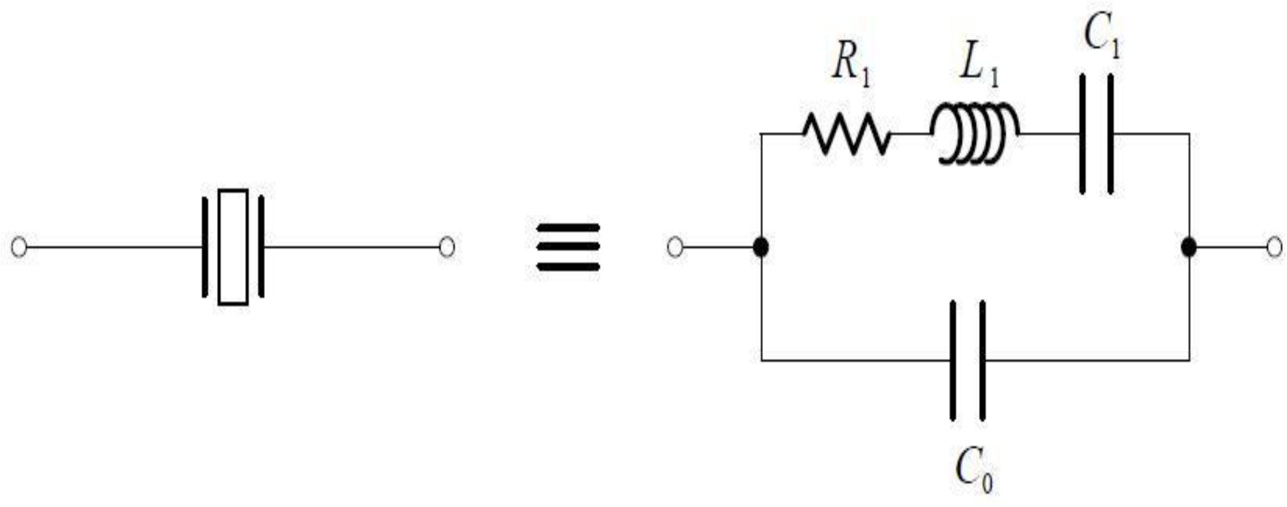

Figure 3.3 Simplified equivalent circuit of a crystal.

3.5 DC Motor

I. Introduction

Faradays used oersteds discovered, that electricity could be used to produce motion, to build the world first electric motor in 1821. Ten years later, using the same logic in reverse, faraday was interested in getting the motion produced by oersteds experiment to be continuous, rather then just a rotatory shift in position. In his experiments, faraday thought in terms of magnetic lines of force. He visualized how flux lines existing around a current carrying wire and a bar magnet. He was then able to produce a device in which the different lines of force could interact a produce continues rotation. The basic faradays motor uses a free-swinging wire that circles around the end of a bar magnet. The bottom end of the wire is in a pool of mercury. Which allows the wire to rotate while keeping a complete electric circuit.

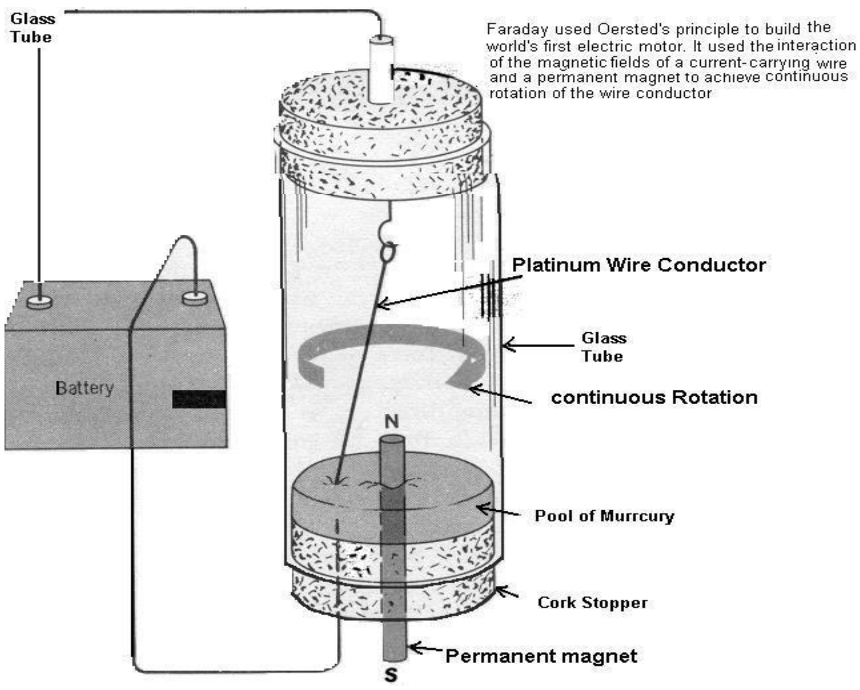

Figure 3.4 Faraday's First Motor

II. Basic motor action

Although Faraday's motor was ingenious. It could not be used to do any practical work. This is because its drive shaft was enclosed and it could only produce an internal orbital motion. It could not transfer its mechanical energy to the outside for deriving an external load. However it did show how the magnetic fields of a conductor and a magnet could be made to interact to produce continuous motion. Faradays motor orbited its wire rotor must pass through the magnet's lines of force.

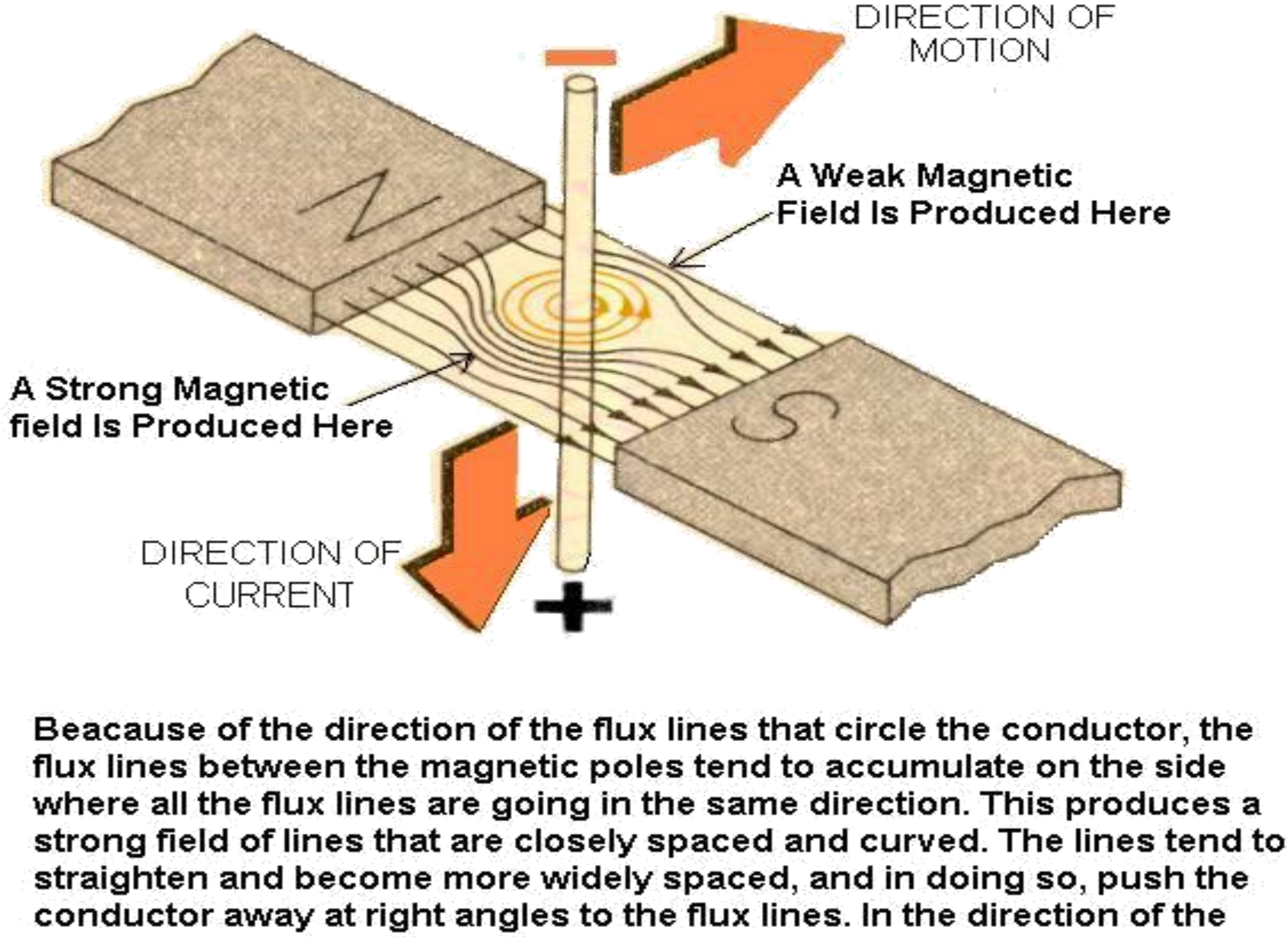

Figure 3.5 Motion of wire in magnetic field

When a current is passes through the wire ,circular lines of force are produced around the wire. Those flux lines go in a direction described by the left-hand rule. The lines of force of the magnet go from the N pole to the S pole You can see that on one side of the wire, the magnetic lines of force are going in the opposite direction as a result the wire, s flux lines oppose the magnet's flux line since flux lines takes the path of least resistance, more lines concentrate on the other side of the wire conductor, the lines are bent and are very closely spaced. The lines tend to straighten and be wider spaced. Because of this the denser, curved field pushes the wire in the opposite direction. The direction in which the wire is moved is determined by the right hand rule. If the current in the wire went in the opposite direction. The direction of its flux lines would reverse, and the wire would be pushed the other way.

III. Rules for motor action

The left hand rule shows the direction of the flux lines around a wire that is carrying current. When the thumb points in the direction of the magnetic lines of force. The right hand rule for motors shows the direction that a current carrying wire will be moved in a magnetic field. When the forefinger is pointed in the direction of the magnetic field lines, and the centre finger is pointed in the direction of the current in the wire the thumb will point in the direction that the wire will be moved.

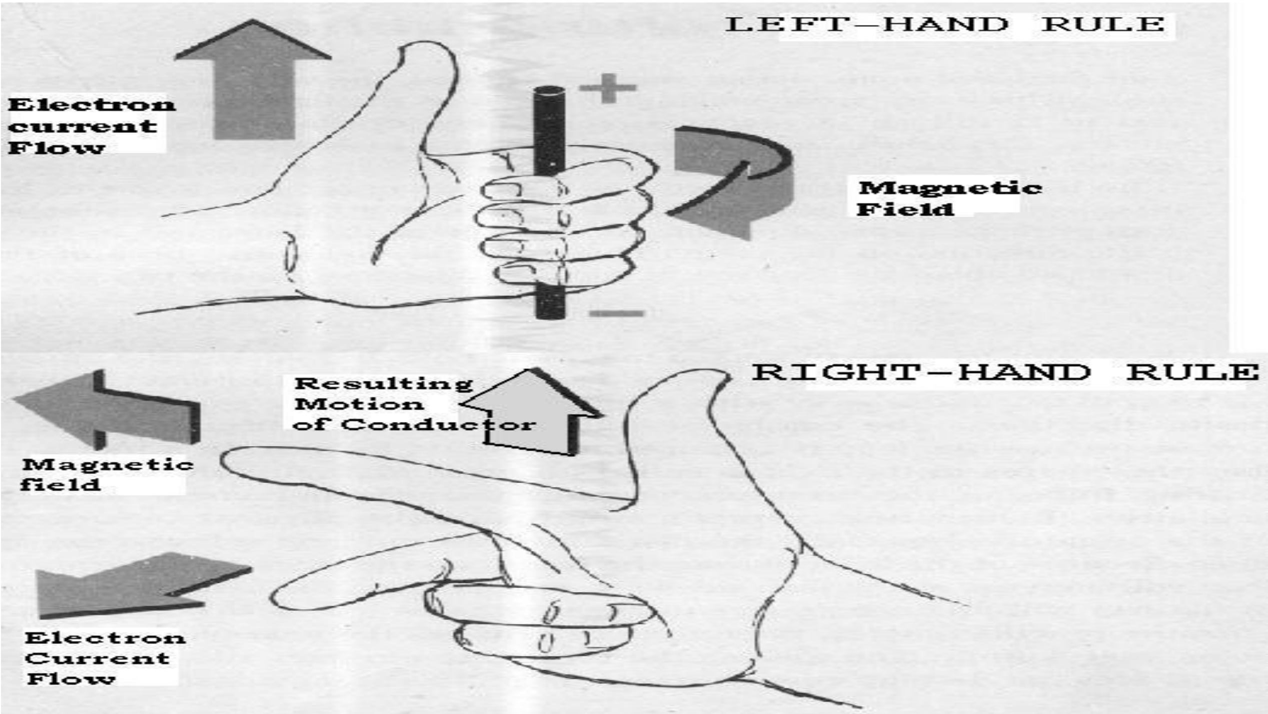

Figure 3.6 Left hand and Right hand Rule

Chapter 4

Code

4.1 Algorithm

Step1 : Start

Step2 : Header files inclusion
Step3 : Take two unsigned integers

Step4 : Initialize DDRC and DDRD .

Step5 : Initialize ADC

Step6 : Infinite while loop is started to get the touch coordinates.

Step7 : To get the coordinates read _ADC function will check the touchscreen output after every 10 milliseconds.

Step8 : If touch is detected then move to step 9 otherwise go back to step
7 Step9 : Allotting the coordinates value to the unsigned integers

Step10: Then start the if else statement to check the mapping of the touchscreen

Step11: According to the mapped coordinates respective commands are given to the
motor Step12: Stop

4.2 Code for getting coordinates on desktop screen

```
#include<windows.h>
#include <iostream>
#include<conio.h>
void GetDesktopResolution(int  &horizontal,int &vertical)
{
   RECT desktop;
   const HWND hDesktop = GetDesktopWindow();
   GetWindowRect(hDesktop, &desktop);
horizontal = desktop.right;
 vertical = desktop.bottom;
}
int main()
{
    int reso_h,reso_v;
    cout<<"Screen Initialised\n";
    POINT p;
    while(1)
    {
```

```
        if(GetKeyState(VK_LBUTTON) & 0x8000)
{
            GetCursorPos(&p);
             break;}
        else if(GetKeyState(VK_ESCAPE) & 0x8000)
        {
            break;
        }}
    cout<<"Mouse Click detected.\n";
    cout<<"x = "<<p.x<<" y = "<<p.y;
    GetDesktopResolution(reso_h,reso_v);
    cout<<"\nResolution : "<<reso_h<<" X
    "<<reso_v; return 0;
}
```

4.3 Code for touchscreen interfacing

```
#include<avr/io.h>
#include<util/delay.h>
#define ADC_VREF_TYPE 0x41
//touch screen
void ADC_init();
unsigned int read_adc(unsigned char);
int main()
{
            unsigned int i,j;
            DDRC=0x00;
            DDRD=0xff;
            ADC_init();
            while(1)
            {
                        i=read_adc(1);
                        j=read_adc(2);
```

```
		if ((i>300) && (j>300))
		{
			PORTD=0b10100000;
		}
		else if((i>300)&&(j<300))
		{
			PORTD=0b10000000;
		}
		else if((i<300)&&(j>300))
		{
			PORTD=0b00100000;
		}
		else
		{
			PORTD=0b00000000;
		}
	}
		return 0;
		getch();
}

void ADC_init(void)		// Initialization of ADC
{ ADMUX=ADC_VREF_TYPE & 0xff;
	ADCSRA=0x87;
}
 unsigned int read_adc(unsigned char adc_input)
{   ADMUX=adc_input  |  (ADC_VREF_TYPE  &  0xff);
	_delay_us(10);
	ADCSRA|=0x40;
	while ((ADCSRA & 0x10)==0);
	ADCSRA|=0x10;
	return ADC;
}
```

Chapter 5

Conclusion and future scope

5.1 Conclusion

Our project is implemented on the PCB board with the help of our project guide and is in working condition.

It can be used in the following fields:-

- **Used in hospital for patients.**

  This project is very useful in hospitals to carry patients around the rooms. Unlike the stretcher it provide more flexibility and is easy to operate.

- **Can be used in homes for handicapped people.**

  At homes it can be used for the handicapped people to move from one place to other.

5.2 Future Scope

In this digital age, our fingers have learned to love touch screens. They provide an easy, intuitive way to navigate our devices to make them do our bidding. But so far, our fingers haven't felt any love in return. All glass screens feel the same — they take, but as far as the sensory experience goes, they don't give back.

The closest you get to finger feedback with most touch screens today comes from mechanical actuators that vibrate the screen when your fingers touch it. You feel a slight vibration, but nothing more.

That all may change when devices employing TeslaTouch come to market. (But don't confuse this technology with Elon Musk's 100 mph Tesla Roadster that carries a $100,000 price tag — the only thing the two Teslas have in common is electricity.)

TeslaTouch is a new touch screen technology being developed by a Disney Research team at Carnegie Mellon University in Pittsburgh. This type of tactile feedback is called electro vibration because it uses electrical charges rather than a mechanical device to create a localized sensation of vibration and friction.

TeslaTouch lets your fingers actually feel what the screen shows. When you move a file on the screen with your finger, you can feel how big it is. Because TeslaTouch can provide a wide variety of tactile sensations such as textures, friction and vibration, Disney calls it the ―future of feel.‖

Bibliography

[1] Finger Instead of Mouse By Holzinger

[2] Basic electrical engineering By D.C kulshreshtha

[3] Resistive touchscreen By Jesse Russell, Ronald Cohn

[4] Crystal oscillator design and temperature compensation By Marvin E.frerking

[5] Discovering Computers 2011: Complete By By Gary Shelly, Misty Vermaat

[6] Embedded C Programming and the Atmel AVR By Richard Barnett, Sarah Cox

[7] Sensor technology By Miko Elwenspoek

[8] Atmel AVR Microcontroller Primer: Programming and Interfacing By Steven F. Barrett

[9] Basic electronics: devices, circuits and it fundamentals by santiram kal

[10] Basic Electronics Engineering & Devices By Dr. R.K. Singh, Ashish Dixit

[11] www.atmel.in

[12] wiki.answers.com

[13] www.datasheetarchive.com

[14] www.wikipedia.com

[15] www.alldatasheet.com

[16] www.resistivetouchscreen.org